Franklin County
NORTH CAROLINA
A Research Triangle Region Community

Public Utilities
1630 US #1 Hwy
Youngsville, NC 27596
Phone: 919.556.6177
Fax: 919.556.6709
www.franklincountync.us

July 31, 2019

Standard Specifications

The following information is in addition to the previously published specifications.

Fire Hydrants can be:
- Mueller Super Centurion 250
- M&H
- Clow
- American Darling

Valves can be:
- Mueller
- M&H
- Clow
- American Darling

Brass fittings needs separate approval, submittals are required for each job

Franklin County Public Utilities
Subdivision General Utility Checklist
Adopted 6-15-2017

Job Name _____

Engineer_____

Contractor_____

Water Lines

_____ All water lines will be DIP located in pavement. Waterlines will be on right side of pavement, PVC will be allowed when pipe is installed in shoulders on existing roads.

_____ Water line minimum bury depth is 3 feet to top of pipe under pavement. If pipe is located on shoulder of existing roads, then pipe will be a minimum of 4' bury depth.

_____ Water lines will be installed under asphalt and Mega-lug restraints standard throughout system.

_____ Waterlines crossing under storm pipe shall have at least 24" of separation. Over storm pipe 12" to 18"

_____ All gate valves required Clow or American Darling.

_____ Coated solid copper tracer wire and detector tape for PVC

_____ Tracer wire requires Copperhead testing port inside TS specified valve box for PVC only. Test ports will be located at all intersections and fire hydrant valves not located at intersections.

Fire Hydrants

_____ All Fire Hydrants and gate valves manufactured: Clow Medallion or American Darling Mark 73-5

_____ All Fire Hydrant legs shall be DIP

_____ Fire Hydrant caps and bonnets shall be painted white Rust-Oleum/Oil Based – 7790 Flat White

_____Minimum 6" leg for Hydrants

_____ Distance between Hydrants no more than 500' in subdivisions

_____ Gate valve required for each Hydrant

Gate Valves

_____All Gate valves shall be Clow or American Darling.

_____ All gate valve boxes to be screw type adjustable with 12" concrete around valve box.

_____ Brass fittings manufactured: Ford (compression type)

_____ Three valves required at intersections, At T's Two

_____ Valve Boxes require concrete donut around box

_____ Tracer wire requires Copperhead testing port inside TS specified valve box located at all intersections and fire hydrant valves located further than 100' from intersection.

Service Taps

_____ Tapping sleeves to be stainless steel wrap-around

_____ Direct taps ¾" and 1" are allowed on DIP

_____ Water meter boxes (MBX 2-18" cast iron oval w/solid lid) for ¾ & 1"

_____ All fittings shall be Ford Brass

_____ All water services shall be Type K soft copper 1" x ¾ " x ¾ " Y

_____ Concrete valve markers required for all valves at main entrance to Subdivision and along major roads (SR, NC and US routes)

Sewer Service

_____ All Gravity Sewer Lines SDR-35 PVC when 10' or less

_____ Gravity Sewer Pipe Deeper than 12' DIP. All Ductile Iron Sewer Pipe requires coating with 401 Protecto Ceramic Epoxy Lining.

_____ Sewer Service Laterals DIP when Gravity Sewer is DIP

_____ Sewer Service Risers PVC down to 15' then DIP

_____ 400 feet maximum between Manholes

_____ Manholes deeper than 10' requires 5' diameter

_____ Manholes deeper than 15' requires 6' diameter

_____ Asphalt will be required 18" wide and 1' deep around manhole rims when located in pavement or roadway.

_____ Outside drops will be DIP utilizing a cross for a road rated clean-out

FRANKLIN COUNTY UTILITIES

STANDARD SPECIFICATIONS FOR WATER AND SEWER

FRANKLIN COUNTY, NC

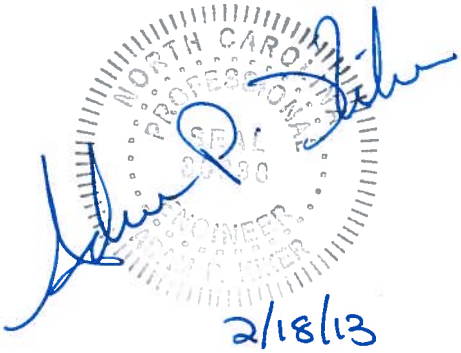

LKC engineering, pllc
200-B West Gate Drive
West End, NC 27376

REVISED: January – 2013
Second Revision: February - 2013

TABLE OF CONTENTS

DETAILED SPECIFICATIONS

Section 1 – Water Distribution	Page 1-1 thru 1-21
Section 2 – Sanitary Sewerage	Page 2-1 thru 2-22
Section 3 – Earthwork and Borings for Utilities	Page 3-1 thru 3-20
Section 4 – Sitework for Pipelines	Page 4-1 thru 4-11
Section 5 – Sewer Pump Stations	Page 5-1 thru 5-18
Section 6 – Emergency Power Systems	Page 6-1 thru 6-8
Section 7 – Radio Telemetry Monitor and Control Systems	Page 7-1 thru 7-16

STANDARD DRAWINGS

DWG No.	Title
W-1	STANDARD WATER MAIN TRANCH DETAIL
W-2	GATE VALVE ASSEMBLY
W-3	TAPPING SLEEVE AND VALVE ASSEMBLY
W-4	STANDARD FIRE HYDRANT INSTALLATION DETAIL
W-4A	STANDARD FIRE HYDRANT INSTALLATION DETAIL (ACROSS THE ROAD)
W-5	SCREW-TYPE VALVE BOX
W-6	CONCRETE THRUST BLOCKING
W-7	THURST COLLAR DETAIL
W-8	VERTICAL BENDS
W-9	COMBINATION AIR/VACUUM RELIEF VALVE ASSEMBLY DETAIL
W-10	2” BLOWOFF ASSEMBLY (PERMANENT)
W-11	2” BLOWOFF ASSEMBLY (TEMPORARY)
W-12	6” BLOWOFF ASSEMBLY
W-13	¾” OR 1” TYPICAL RESIDENTIAL SERVICE CONNECTION
W-14	STANDARD MULTIPLE BRANCH SERVICES
W-15	STANDARD GANG METER ASSEMBLY
W-16	¾” AND 1” WATER METER BOX DETAIL
W-17	2” TYPICAL RESIDENTIAL SERVICE CONNECTION
W-18	FIRE SERVICE METER VAULT (SIZE VARIES) LAYOUT AND SECTION
W-19	3” – 8” REDUCED PRESSURE BACKFLOW PREVENTER
W-20	¾” – 2” REDUCED PRESSURE BACKFLOW PREVENTER
W-21	ADD ON METER AND BACKFLOW
W-22	3” – 8” DOULBE CHECK VALVES
W-23	¾” – 2” DOUBLE CHECK VALVES
W-24	WATER FROM HYDRANTS TANKER DETAIL
W-25	BORE AND JACK DETAILS
W-26	DIRECTIONAL BORE DETAILS

DWG No.	Title
S-1	SANITARY SEWER MAIN TRENCH DETAIL
S-2	SCREW-TYPE VALVE BOX
S-3	STANDARD SEWER FORCE MAIN TRENCH DETAIL
S-4	GATE VALVE ASSEMBLY FOR SEWER FORCE MAINS
S-5	4” SEWER SERVICE CONNECTION WITH CLEAN OUT DETAIL (NEW INSTALLATION)
S-6	TYPICAL SEWER SERVICE BACK-WATER VALVE INSTALLATION DETAIL
S-7	PRECAST MANHOLE DETAIL
S-8	PRECAST MANHOLE DETAIL BUILT OVER EXISTING SANITARY SEWER
S-9	PRECAST CONCRETE MANHOLE WITH OUTSIDE DROP CONNECTION
S-10	MANHOLE VENT DETAIL
S-11	MANHOLE COVER DETAIL
S-12	WATERTIGHT MANHOLE RING AND COVER
S-13	LOCKING MANHOLE COVER AND RING DETAIL
S-14	STRUCTURE STEP DETAIL
S-15	4” SERVICE CONNECTION TO EXISTING OR NEW PRECAST MANHOLE
S-16	BYPASS PUMPING CONNECTION DETAIL
S-17	1,000 GALLON GREASE TRAP DETAIL
S-18	FORCE MAIN TAPS FOR BUSINESSES
S-19	COMBINATION AIR/VACUUM RELIEF VALVE ASSEMBLY DETAIL
S-20	GENERAL SITE PLAN SEWER PUMP STATION

DETAILED SPECIFICATIONS

SECTION 1: WATER DISTRIBUTION

PART 1 GENERAL

1.1 REFERENCES

The publications listed below form a part of this specification to the extent referenced. The publications are referred to in the text by the basic designation only. Latest Revisions shall be applicable to all references.

AMERICAN NATIONAL STANDARDS INSTITUTE (ANSI)

ANSI B18.5.2.1M	(1981; R 1995) Metric Round Head Short Square Neck Bolts

AMERICAN SOCIETY OF MECHANICAL ENGINEERS (ASME)

ASME/ANSI B16.1	(1989) Cast Iron Pipe Flanges and Flanged Fittings

AMERICAN SOCIETY FOR TESTING AND MATERIALS (ASTM)

ASTM A 48	(1994) Standard Specification for Grey Iron Castings
ASTM A 47	(1990) Ferritic Malleable Iron Castings
ASTM A 126	(1995) Standard Specification for Grey Iron Castings for Valves, Flanges and Pipe Fittings
ASTM A 276	(2003) Standard Specification for Stainless Steel Bars and Shapes
ASTM A 307	(1994) Carbon Steel Bolts and Studs, 60,000 psi Tensile Strength
ASTM A 536	(1984; R 1993) Ductile Iron Castings
ASTM A 563	(1994) Carbon and Alloy Steel Nuts
ASTM C 94	(1994) Ready-Mixed Concrete
ASTM D 429	(1999) Standard Specification for Rubber-Property Adhesion to Rigid Substrates

AMERICAN WATER WORKS ASSOCIATION (AWWA)

AWWA B300	(2010) Hypochlorites
AWWA B301	(2010) Liquid Chlorine
AWWA C104/A21.4	(2008) Cement-Mortar Lining for Ductile-Iron Pipe and Fittings for Water
AWWA C110/A21.10-12	(2012) Ductile-Iron and Gray-Iron Fittings, 3 in. Through 48 in. (75 mm Through 1200 mm), for Water and Other Liquids
AWWA C111/A21.11.12	(2007) Rubber-Gasket Joints for Ductile-Iron Pressure Pipe and Fittings
AWWA C115/A21.15	(2011) Flanged Ductile-Iron Pipe with Ductile-Iron or Gray-Iron Threaded Flanges
ANSI/AWWA C151/A21.51	(2009) Ductile-Iron Pipe, Centrifugally Cast, for Water or Other Liquids
AWWA C207	(2007) Steel Pipe Flanges for Waterworks Service
AWWA C502	(2005) Dry-Barrel Fire Hydrants
AWWA C504	(2010) Rubber Sealed Butterfly Valves
AWWA C508	(2009) Swing-Check Valves for Waterworks Service, 2 in. (50 mm) Through 24 in. (600 mm) NPS
AWWA C509	(2009) Resilient-Seated Gate Valves for Water and Sewerage Systems
AWWA C512	(2001) Air Release, Air/Vacuum, and Combination Air Valves for Waterworks Service
AWWA C515	(2001) Reduced Wall, Resilient Seated Gate Valves for Waterworks Service
AWWA C550	(2001) Protective Epoxy Coatings for Valves and Hydrants
AWWA C600	(**2010**) Installation of Ductile-Iron Water Mains and Their Appurtenances

AWWA C605	**(2006) Underground Installation of PVC Pressure Pipe and Fittings for Water**
AWWA C651	(1992) Disinfecting Water Mains
AWWA C900	(2007)PVC Pipe and Fabricated Fittings, 4 In. Through 12 In. (100 mm Through 300 mm), for Water Transmission and Distribution
AWWA C901	(2008)Polyethylene (PE) Pressure Pipe and Tubing, 1/2 In. (13 mm) Through 3 In. (76 mm), for Water Service
AWWA C905	(2010)Polyvinyl Chloride (PVC) Pressure Pipe and Fabricated Fittings, 14 In. Through 48 In. (350 mm Through 1,200 mm)
AWWA C906	(2007) Polyethylene (PE) Pressure Pipe and Fittings, 4 In. (100 mm) Through 63 In. (1600 mm), for Water Distribution and Transmission.
AWWA C909	(2009) Molecularly Oriented Polyvinyl Chloride (PVCO) Pressure Pipe, 4 In. Through 24 In. (100 mm Through 600 mm), for Water, Wastewater, and Reclaimed Water Service

NATIONAL SANITATION FOUNDATION

NSF 61	(2003) Drinking Water System, Health Effects

NCAC, TITLE 15A, DENR SUBCHAPTER 18C, WATER SUPPLIES

Par. .0906	Relation of Water Mains to Sewers
Par. .1003	Disinfection of Storage Tanks and Distribution Systems

UNDERWRITERS LABORATORIES INC. (UL)

UL 312	(2004) Standards for Check Valves for Fire Protection Service
UL 789	(1993; R 1994) Indicator Posts for Fire-Protection Service

1.2 DESIGN REQUIREMENTS

1.2.1 General

A full hydraulic analysis utilizing computer modeling techniques will be required for all improvements to the Franklin County water system. Proposed improvement operating pressures shall meet all North Carolina regulatory requirements including a minimum fire hydrant flow of 500

gpm at a residual pressure of 20 psi system wide. The following general guidelines for design and materials shall be adhered to.

1. Water Main pipe material shall be Ductile Iron or PVC. Requirements for ductile iron pipe class can be found in the paragraphs below. All PVC pipe 4" through 12" shall be a minimum classification of AWWA C900 DR 18 (Class 150). 2" and 3" PVC pipe shall be SDR 21.
2. Fire hydrants shall have a minimum spacing of 1,000'.
3. Line valves shall have a minimum spacing of 1,000'.
4. Locate fire hydrants along R/W line and at lot corners where possible.
5. Minimum depth of bury for water mains shall be 4'.
6. All water main crossing under storm drain shall be ductile iron.
7. Water main shall not be installed under pavement section, curb and gutter, or sidewalk.

1.2.2 Water Distribution Mains

The Contractor shall furnish all types of pipe and other incidentals required for the construction of a complete water system as shown on the drawings and as specified herein. Unless otherwise noted, the materials listed below are acceptable to Franklin County for use in water distribution systems. Should the Contractor desire to use other materials not listed in these specifications, written permission must be obtained from Franklin County. All material shall be free from defects impairing strength and durability and be of the best commercial quality for the purposes specified. It shall have structural properties sufficient to safely sustain or withstand strains and stresses to which it is normally subjected and be true to detail. Connect to existing water mains as indicated. Provide water main accessories, gate valves, fire hydrants, combination air valves, service laterals, water meters, and backflow preventers as specified and where indicated.

1.2.3 Water Service Lines

The Contractor shall furnish all materials and all other incidentals required for the installation of a complete water service connection as shown on the detail drawings and as specified herein. Unless otherwise noted, the materials listed below are acceptable to Franklin County for use in water services. Should the Contractor desire to use other materials not listed in these specifications, written permission must be obtained from Franklin County. All material shall be free from defects impairing strength and durability and be of the best commercial quality for the purposes specified. It shall have structural properties sufficient to safely sustain or withstand strains or stresses to which it is normally subjected and be true to detail. Materials supplied shall be of the designations and description indicated on the plans or described herein. Provide water service lines indicated as 3/4" lines from the new water distribution main through the meter box to be located at the boundary of the existing street right-of-way. Water service lines shall be K soft copper. Provide water service line appurtenances as specified.

1.3 SUBMITTALS

Submit six (6) copies of the following to Franklin County for approval before beginning construction.

1.3.1 Product Data

Submit manufacturer's standard drawings or catalog cuts, except submit both drawings and cuts for push-on joints. Include information concerning gaskets with submittal for joints and couplings.

A. Water distribution main piping, fittings, joints, valves, valve boxes and couplings.

B. Water service line piping and appurtenances (saddles, corporation stops, compression fittings, meter setters, meter boxes, etc.).

C. Fire Hydrants

D. Combination Air Valves and Precast Concrete Manholes.

1.3.2 Instructions

A. Installation procedures for water piping.

1.3.3 Certificates

Certificates shall attest that tests set forth in each applicable referenced publication have been performed, whether specified in that publication to be mandatory or otherwise and that production control tests have been performed at the intervals or frequency specified in the publication. Other tests shall have been performed within 3 years of the date of submittal of certificates on the same type, class, grade, and size of material as is being provided for the project.

A. Water distribution main piping, fittings, joints, valves, and couplings.

B. Water service line piping, fittings, joints, valves, and couplings.

C. Shop-applied lining and coating

D. Fire Hydrants

1.4 DELIVERY, STORAGE, AND HANDLING

1.4.1 Delivery and Storage

Inspect materials delivered to site for damage. Unload and store with minimum handling. Store materials on site in enclosures or under protective covering. Store plastic piping, jointing materials and rubber gaskets under cover out of direct sunlight. Do not store materials directly on the ground. Keep inside of pipes, fittings, valves and hydrants free of dirt and debris.

1.4.2 Handling

Handle pipe, fittings, valves, hydrants, and other accessories in a manner to ensure delivery to the trench in sound undamaged condition. Take special care to avoid injury to coatings and linings on pipe and fittings; make satisfactory repairs if coatings or linings are damaged. Carry, do not drag pipe to the trench. Store plastic piping, jointing materials and rubber gaskets that are not to be installed immediately, under cover out of direct sunlight.

PART 2 PRODUCTS

2.1 WATER DISTRIBUTION MAIN MATERIALS

2.1.1 Polyvinyl Chloride Pipe (PVC)

2.1.1.1 Dimension Ratio 18

PVC pipe shall conform to ANSI/AWWA C900 latest revision for polyvinyl chloride pressure pipe sizes 4 inch through 12 inch. Class 150, DR 18 pipe or as called for on the plans or in the schedule bid items shall be furnished. The pipe shall be plainly marked with the following information: manufacturer's name, size, material (PVC) type and grade or compound, NSF seal, pressure class and reference to appropriate product standards. Pipe shall be furnished in 20 ft. laying lengths. Random lengths shall be a minimum of 10 feet long and shall comprise no more than 15 percent of the length of the piping system. Pipe shall be furnished in factory-packaged units. Pipe shall be furnished in cast iron pipe equivalent outside diameters with rubber-gasketed separate couplings or push-on joints. Pipe shall not fail when subjected to the following tests; (1) sustained pressure (2) burst pressure (3) flattening and extrusion quality. Tests shall be conducted as outlined in ANSI/AWWA C900-07. Each length of PVC pipe shall pass a hydrostatic integrity test at the factory of 4 times the pressure class of the pipe for 5 seconds. PVC Resin shall meet the requirements of ASTM D1784.

2.1.1.2 PVC Plastic Pressure Pipe Joints

Joints for pipe shall be push-on joints. Joints at fittings shall be mechanical joints unless otherwise indicated.

2.1.2 Ductile Iron Pipe

Ductile-Iron Pipe, except flanged pipe, ANSI/AWWA C151/A21.51, NSF 61 certified, Pressure Class 350 for pipe up to 12" diameter. All larger pipe shall be minimum Pressure Class 250 unless otherwise required due to design considerations. Flanged pipe, AWWA C115/A21.15. Ends of pipe and fittings shall be suitable for the specified joints. Pipe and fittings shall have cement-mortar lining, AWWA C104/A21.4, standard thickness. Ductile iron shall conform to ASTM A-536, latest revision, Grade 70-50-05.

2.1.2.1 Ductile Iron Pipe Joints

Joints for pipe shall be push-on joints unless otherwise indicated. Joints for fittings shall be mechanical joints unless otherwise indicated. Joints made with sleeve-type mechanical coupling may be used in lieu of push-on joint, subject to the limitations specified in paragraph entitled "Sleeve-Type Mechanical Couplings."

A. Push-On Joints: Shape of pipe ends and fitting ends, gaskets, and lubricant for joint assembly, AWWA C111/A21.11.

   1. Restrained Push-On Joints: Restrained push-on joints for pipe where indicated shall be designed for a working pressure of 350 psi for 4"-24" pipe. Restrained push-on joints

shall be capable of being deflected a minimum of 4 degrees after assembly for pipe through 12" and 3 degrees for pipe 14" – 24". Restrained push-on joints shall be manufactured, not by specialized gripping segment gasket installation.

B. Mechanical Joints: Dimensional and material requirements for pipe ends, glands, bolts and nuts, and gaskets, AWWA C111/A21.11.

1. Restrained Flexible Bolted Joints: Restrained mechanical joint pipe (and connections to MJ fittings and valves) shall utilize a flexible bolted joint designed for a working pressure of 350 psi for 4" –24" pipe. Restrained flexible bolted joints shall be capable of being deflected a minimum of 4 degrees for pipe through 12", 3 degrees for 14" and 16" pipe, 2.5 degrees for 18" and 20" pipe and 2 degrees for pipe 24" through 36".

C. Flanged Joints: Bolts, nuts, and gaskets for flanged connections as recommended in the Appendix to AWWA C115/A21.15. Flange for setscrewed flanges shall be of ductile iron, ASTM A 536, Grade 65-45-12, and conform to the applicable requirements of ASME/ANSI B16.1, Class 250. Setscrews for setscrewed flanges shall be 190,000-psi tensile strength, heat treated and zinc-coated steel. Gasket for setscrewed flanges shall conform to applicable requirements for mechanical-joint gaskets specified in AWWA C111/A21.11. Design of setscrewed gasket shall provide for confinement and compression of gasket when joint to adjoining flange is made.

D. Sleeve-Type Mechanical Coupled Joints: As specified in paragraph entitled "Sleeve-Type Mechanical Couplings."

2.1.2.2 Ductile Iron Pipe Fittings

Ductile iron fittings shall conform to ANSI A 21.10 (AWWA C-110), latest revision with the exception of the manufacturer's design dimensions and thickness and be NSF 61 certified. Fittings shall have a working pressure rating of 350 psi for fittings, 12 inch and under and 250 psi for fittings over 12 inch. Ductile iron shall conform to ASTM A-536, latest revision, Grade 70-50-05.

A. Thickness Design: Nominal thickness of the fittings shall be equal to Class 51 ductile iron pipe as specified in ANSI A 21.51 (AWWA C-151).

B. Lining: Fittings shall have a cement mortar lining and seal coating conforming with ASNI A 21.4 (AWWA C-104), latest revision.

C. Exterior Coating: Fittings shall have an outside coating of bituminous material in accordance with the manufacturer's specifications. The final coat shall be continuous and smooth being neither brittle when subjected to low temperatures nor sticky when exposed to hot sun. The coating shall be strongly adherent to the pipe at all temperatures.

D. Fitting Joints: Fittings shall have mechanical or flanged joints as indicated and specified herein.

1. Mechanical Joint: ANSI Specification A 21.11 (AWWA C-111), latest revision, for three inch pipe and larger. Bolted mechanical joint fittings shall be used with ductile iron pipe,

PVC pipe, for all hydrant tees, and where specifically called for on the plans or in the Schedule of Bid Items.

a. Restrained Flexible Bolted Joint: Restrained MJ fittings shall be designed for a working pressure of 350 psi for 4"-24" ductile iron pipe. Fittings such as these shall be part of a manufactured flexible bolted pipe restraint system as described above for MJ ductile iron pipe.

b. Mega Lug Restraint for D.I.P.: Mega Lugs may be used for restraint of mechanical joint fittings. The restraint mechanism shall consist of a plurality of individually actuated gripping surfaces to maximize restraint capability. Glands shall be manufactured of ductile iron conforming to ASTM A536-80. The gland shall be such that it can replace the standardized mechanical joint gland and can be used with the standardized mechanical joint bell. Twist off nuts, sized the same as tee-head bolts shall be used to insure proper actuating of restraining devices. The restraining glands shall have a pressure rating equal to that of the pipe on which it is used. When mechanical thrust restraints are used concrete thrust blocking shall be deleted from the installation.

2. Flanged Joint: Flanged fittings shall be constructed of ductile iron with flanges drilled and faced per ANSI B 16.1 for both 125 Lb. working pressure.

2.1.3 Valves, Hydrants, and Other Water Main Accessories

2.1.3.1 Resilient-Seated Gate Valves for Buried Piping

Resilient-Seated Gate Valves for buried piping shall conform to AWWA C509 or AWWA C515 unless otherwise specified and shall be NSF 61 certified. 24" valves shall have bevel gearing for horizontal installation. Valves smaller than 24" shall be configured for vertical installation. Valves shall be nonrising stem type with mechanical-joint ends and shall open by counterclockwise rotation of the valve stem. Stuffing boxes shall have 0-ring stem seals, except for those valves for which gearing is specified, in which case use conventional packing in place of o-ring seal. Stuffing boxes shall be bolted and constructed so as to permit easy removal of parts for repair. The wedge shall be cast iron, completely encapsulated with resilient material. The resilient sealing material shall be permanently bonded to the cast iron wedge with a rubber-tearing bond to meet ASTM D429. The gate valve stem and stem nut shall be copper alloy. The body and bonnet shall be coated both interior and exterior with a fusion bonded heat cured thermo setting material meeting all application and performance requirements of AWWA C550. The minimum design working pressure shall be for valves up to 12" and 200 psi for valves larger than 12". Resilient seated gate valves shall be manufactured by Clow, Mueller, American Flow Control, M&H or an approved equal. Valves up to 12" shall be of one manufacturer.

2.1.3.2 Resilient-Seated Gate Valves in Valve Pit(s) and Aboveground Locations

Resilient-Seated Gate Valves for installation in vaults or above ground shall conform to AWWA C509 or AWWA C515 unless otherwise specified and shall be NSF 61 certified. Valves shall be nonrising stem type with flanged ends. Valves up to 12" shall be of one manufacturer.

2.1.3.3 Check Valves

Swing-check type, AWWA C508 or UL 312. Valves conforming to: (1) AWWA C508 shall have iron or steel body and cover and flanged ends, and (2) UL 312 shall have cast iron or steel body and cover, flanged ends, and designed for a working pressure of 200 psi. Materials for UL 312 valves shall conform to the reference standards specified in AWWA C508. Valves shall have clear port opening. Valves shall be weight-loaded where indicated. Valves shall be of one manufacturer.

2.1.3.4 Butterfly Valves for Buried Piping (Larger than 12")

Butterfly valves shall be manufactured in accordance with the latest revision of AWWA C504 for Class 150B service and shall be NSF 61 certified. Valve bodies shall be constructed of cast iron ASTM A-126 Class B and conform to AWWA C504 for laying lengths and minimum body shell thickness. End connections shall be mechanical joint. Valve discs shall also be made from cast iron ASTM A-126 Class B or ASTM A-48 Class 40 in sizes 24" and smaller. Disc shall be furnished with 316 stainless steel seating edge to mate with the rubber seat on the body. Valve seat shall be Buna-N rubber located on the valve body. Valves 20" and smaller shall have bonded seats that meet test procedures outlined in ASTM D-429 Method B. Sizes 24" and larger shall be retained in the valve body by mechanical means without use of metal retainers or other devices located in the flow stream. Valve shafts shall be 18-8 type 304 stainless steel conforming to ASTM A-276. Shaft seals shall be standard self-adjusting split V packing. Shaft seals shall be of a design allowing replacement without removing the valve shaft. Valve bearings shall be sleeve type that are corrosion resistant and self-lubricating. Valve actuators shall be fully grease packed and have stops in the open/close position. The actuator shall have a mechanical stop which will withstand an input torque of 450 ft. lbs. against the stop. The traveling nut shall engage alignment grooves in the housing. The actuators shall have a built in packing leak bypass to eliminate possible packing leakage into the actuator housing. All internal and/or external surfaces shall be covered with a polyamide cured epoxy coating applied over a sand blasted "new white metal surface" per SSPC-SP10 to a minimum of 6 mils in compliance with AWWA C550. Butterfly valves shall be manufactured by Mueller, Pratt, Dezurik, Keystone or an approved equal.

2.1.3.5 Fire Hydrants

Dry-Barrel Fire hydrants shall be manufactured to meet or exceed ANSI/AWWA C502-94. Fire hydrants shall be of the compression type with 4-1/2" valve opening designed to close against line pressure. Fire hydrants shall be furnished with a sealed oil or grease reservoir located in the bonnet, so that all threaded and bearing surfaces are automatically lubricated. Teflon washers shall be used for ease of operation. The seat ring shall be bronze and threaded into a drain ring located between the lower barrel and shoe. The hose and pumper nozzles shall be threaded. The threads for nozzles shall be National Standard. The hydrants shall have two (2) 2-1/2" hose nozzles with cap, and one (1) 4-1/2" pumper nozzle and cap. Hydrants shall have a minimum 36" bury and shall stand approximately 30" above ground elevation. Hydrants shall be designed with a breakaway feature that will break cleanly upon impact. This shall consist of a two-part breakable safety flange. The operating nut shall be 1-1/2" pentagonal and shall open counterclockwise. All hydrants shall be cast marked on the outside such that visible identification can me made as to type and design. All hydrants shall receive two (2) exterior shop coats of OSHA safety color "Red" with all caps in a high gloss enamel as specified by ANSI/AWWA C502-94. In addition, one finish exterior coat, as described, shall be applied after construction operations are complete, as deemed necessary by

Franklin County. The paint used shall be as manufactured by Kyanize, Tnemec, Carboline or equal. Fire Hydrants shall be Clow Medallion.

2.1.3.6 Tapping Sleeves and Tapping Valves

A. Stainless Steel Fully Gasketed Wrap Around Tapping Sleeve: Tapping sleeve body, strap, flange, lifter bar studs, nuts and washers shall all be constructed of 18-8 Type 304 stainless steel. Welds shall be fully passivated. Nuts and washers shall be fluorocarbon coated. Outlet pipe shall be constructed of Schedule 5, 18-8 Type 304 stainless steel. Tapping Sleeve flange shall conform to AWWA C207 Class D-ANSI 150 lb. drilling. Boltholes shall straddle pipe centerline. Tapping sleeve shall be equipped with a ¾" brass test plug. The outlet gasket shall be gridded virgin Buna-N compounded for water service per ASTM D2000. Tapping sleeve full gasket shall be gridded virgin SBR compounded for water service per ASTM D2000 and shall give 360-degree pipe coverage. Tapping Sleeves shall be NSF 61 certified. Stainless Steel Tapping Sleeves 4" through 8" shall have a minimum 200-psi working pressure rating. Sleeves 10" to 24" shall have a minimum 200-psi working pressure rating. Stainless Steel Wrap Around Tapping Sleeves shall be manufactured by Ford, Mueller, or Romac.

B. Resilient Seated Tapping Valves: Tapping Valves shall be resilient-seated gate valves conforming to AWWA C509 and shall be NSF 61 certified. The body and bonnet shall be coated both interior and exterior with a fusion bonded heat cured thermo setting material meeting all application and performance requirements of AWWA C550. The minimum design working pressure shall be 200 psi for tapping valves up to 12" and 150 psi for valves larger than 12". Resilient seated gate valves shall be manufactured by Mueller, American Flow Control, M&H or an approved equal.

2.1.3.7 Combination Air Valves

Combination air release valves shall be installed at high points in the water main as indicated by the plans in order to release air in the main as the main is filling and allow air to enter the system when **draining** or subject to negative pressure. The valve shall also release an accumulation of air when the system is under pressure. Combination air release valves shall be manufactured to meet or exceed the requirements of ANSI/AWWA C512-07 or latest revision and shall be NSF 61 certified. The valve shall operate through a compound lever system that will seal both the pressure orifice and the air vacuum orifice simultaneously. This lever system shall permit a ¼" orifice to release an accumulation of air from the valve body at a capacity of 98 cfm of air and pressure of 200 psig. The function of the lever system shall also permit a positive disengagement of the main valve from the large orifice. As the float drops and pressure decreases, the disengagement shall be immediate and not be limited to the initial draw of a vacuum. The valves shall be 2" NPT screwed or ANSI Class 125 flanged inlet connection and shall be cast iron body, top and inlet flange (where required), stainless steel float and trim with Buna-n seat. Valves, which operate the pressure plunger via a single lever and fulcrum, will not be acceptable. A protectop shall be supplied to prevent debris from entering the outlet of the valve. Each valve assembly shall include a 2" NRS, solid disc, inside screw bonnet gate valve with a 200 WOG pressure rating and conforming to Federal Specification MSS SP-80. Each valve assembly shall be installed in a manhole as shown on the detail sheet in the plans. The Combination Air Valves shall be manufactured by Crispin, Apco, Val-Matic, or A.R.I.

2.1.3.8 Indicator Posts

UL 789 and as detailed on the project drawings. Provide for gate valves where indicated.

2.1.3.9 Valve Boxes

Provide a valve box for each gate valve on buried piping. Valve boxes shall be of cast iron or precast concrete of a size suitable for the valve on which it is to be used and shall be adjustable. Provide a round head. Cast the word "WATER" on the lid. The least diameter of the shaft of the box shall be 5 1/4 inches. Cast-iron box shall have a heavy coat of bituminous paint.

2.1.3.10 Sleeve-Type Mechanical Couplings

Couplings shall be designed to couple plain-end piping by compression of a ring gasket at each end of the adjoining pipe sections. The coupling shall consist of one middle ring flared or beveled at each end to provide a gasket seat; two follower rings; two resilient tapered rubber gaskets; and bolts and nuts to draw the follower rings toward each other to compress the gaskets. The middle ring and the follower rings shall be true circular sections free from irregularities, flat spots, and surface defects; the design shall provide for confinement and compression of the gaskets. For ductile iron and PVC plastic pipe, the middle ring shall be of cast-iron or steel; and the follower rings shall be of malleable or ductile iron. Cast iron, ASTM Malleable and ductile iron shall, conform to ASTM A 47 and ASTM A 536, respectively. Steel shall have a strength not less than that of the pipe. Gaskets shall be designed for resistance to set after installation and shall meet the applicable requirements specified for gaskets for mechanical joint in AWWA C111/A21.11. Bolts shall be track-head type, ASTM A 307, Grade A, with nuts, ASTM A 563, Grade A; or round-head square-neck type bolts, ANSI B18.5.2.1M and ANSI/ASME B18.5.2.2M with hex nuts, ASME/ANSI B18.2.2. Bolts shall be 5/8 inch in diameter; minimum number of bolts for each coupling shall be 8 for 12-inch pipe, 8 for 8-inch pipe, and 6 for 6-inch pipe. Boltholes in follower rings shall be of a shape to hold fast the necks of the bolts used. Mechanically coupled joints using a sleeve-type mechanical coupling shall not be used as an optional method of jointing except where pipeline is adequately anchored to resist tension pull across the joint.

2.1.3.11 Tracer Wire for Nonmetallic Piping

Provide bare copper or aluminum wire not less than 0.10 inch in diameter in sufficient length to be continuous over each separate run of nonmetallic pipe. Wire must be fixed to the pipe.

2.2 WATER SERVICES (3/4-INCH)

2.2.1 Tapping Saddles

Tapping saddles shall provide full support around the circumference of the pipe with a designed in safeguard against over-tightening to prevent deforming the pipe. All parts of the saddle shall be constructed of corrosive resistant bronze or galvanized malleable iron including bolts and nuts required to assemble. Only saddles designed specifically for the type water main pipe used shall be allowed. Threads shall be AWWA standard cc tapered. Tapping saddles shall be manufactured by Ford.

2.2.2 ¾" Corporation Stops

Corporation stops shall be of bronze construction and a minimum 3/4" (inlet and outlet). Inlet threads shall be AWWA Standard Taper cc. Outlets will be IP threads with a brass compression-fitting adapter for copper service tubing. Corporation stops shall be manufactured by Ford.

2.2.3 Copper Pipe for Service Laterals

¾" pipe for service lines shall be K soft copper. Fittings shall be compression type brass fittings.

2.2.4 Copper Meter Yokes

Copper Meter Yokes shall be 5/8" x 3/4" and shall include an integral Ball Angle Meter Valve and dual check valve. Copper Meter Yokes shall be manufactured by Ford.

2.2.5 Meter Boxes

Meter boxes shall be supplied with each service connection. Boxes shall be constructed of cast iron. Cast Iron Boxes shall be made in two pieces, i.e. box and cover. The box shall be a minimum of 18" deep by 20" long by 10" wide. Cast iron boxes shall be Dewey Brothers, Ford Meter Box Company, Opelike Foundry Company or equal.

2.2.6 Teflon Tape

Teflon tape shall be used on all threaded connections to reduce the possibility of leaking joints.

2.2.7 Water Meters

Water meters shall be supplied by Franklin County and 2" meter shall be supplied by the contractors.

PART 3 EXECUTION

3.1 INSTALLATION OF PIPELINES

3.1.1 General Requirements for Installation of Pipelines

These requirements shall apply to all pipeline installation except where specific exception is made in the "Special Requirements..." paragraphs. The Contractor shall furnish all labor, tools, equipment

and other incidentals required for the construction of the water distribution system as shown on the drawings and as specified herein. The work shall include laying pipe and setting fittings, valves, hydrants, and services, pressure testing and sterilization of the water distribution system. Materials shall be as specified in previous sections of these specifications.

3.1.1.1 Location of Water Lines

Terminate the work covered by this section at the edge of the existing NCDOT or street right of way, unless otherwise indicated. Do not lay water lines in the same trench with gas lines, fuel lines or electric wiring. Minimum requirements for proximity of new water mains with sanitary sewer piping shall be as per NCAC Title 15A, Subchapter 18C "Water Supplies", Section .0906 and as follows:

A. Water Piping Installation Parallel With Sewer Piping

1. Normal Conditions: Lay water piping at least 10 feet horizontally from a sewer or sewer manhole whenever possible. Measure the distance edge-to-edge.

2. Unusual Conditions: When local conditions prevent a horizontal separation of 10 feet, the water piping may be laid closer to a sewer or sewer manhole provided that:

(a) The bottom (invert) of the water piping shall be at least 18 inches above the top (crown) of the sewer piping.

(b) Where this vertical separation cannot be obtained, the sewer piping shall be constructed of AWWA-approved water ductile iron pipe and pressure tested in place without leakage prior to backfilling.

(c) The sewer manhole shall be of watertight construction and tested in place.

B. Installation of Water Piping Crossing

1. Normal Conditions: Water piping crossing above sewer piping shall be laid to provide a separation of at least 18 inches between the bottom of the water piping and the top of the sewer piping.

2. Unusual Conditions: When local conditions prevent a vertical separation described above, use the following construction:

(a) Sewer piping passing over or under water piping shall be constructed of AWWA-approved ductile iron water piping, pressure tested in place without leakage prior to backfilling.

(b) Water piping passing under sewer piping and storm sewer piping shall, in addition, be protected by providing a vertical separation of at least 18 inches between the bottom of the sewer piping and the top of the water piping; adequate structural support for the sewer piping to prevent excessive deflection of the joints and the settling on and breaking of the water piping; and that the length, minimum 20 feet,

of the water piping be centered at the point of the crossing so that joints shall be equidistant and as far as possible from the sewer piping and needs to be Ductile Iron.

(c) Sewer Piping or Sewer Manholes: No water piping shall pass through or come in contact with any part of a sewer manhole.

3.1.1.2 Earthwork

Perform earthwork operations in accordance with Section 3, "Earthwork an Borings for Utilities." All Ductile Iron and Polyvinyl Chloride (PVC) pipe shall be installed in Type 3 embedment. The pipe shall be bedded in 4" of loose soil. Backfill shall be lightly consolidated to the top of the pipe. Loose soil is defined as native soil excavated from the trench, free of rocks, foreign materials and frozen earth.

3.1.1.3 Pipe Laying and Jointing

Remove fins and burrs from pipe and fittings. Before placing in position, clean pipe, fittings, valves, and accessories, and maintain in a clean condition. Provide proper facilities for lowering sections of pipe into trenches. Do not under any circumstances drop or dump pipe, fittings, valves, or any other water line material into trenches. Cut pipe accurately to length established at the site and work into place without springing or forcing. Replace by one of the proper length any pipe or fitting that does not allow sufficient space for proper installation of jointing material. Blocking or wedging between bells and spigots will not be permitted. Lay bell-and-spigot pipe with the bell end pointing in the direction of laying. Grade the pipeline in straight lines; avoid the formation of dips and low points. Support pipe at proper elevation and grade. Secure firm, uniform support. Wood support blocking will not be permitted. Lay pipe so that the full length of each section of pipe and each fitting will rest solidly on the pipe bedding; excavate recesses to accommodate bells, joints, and couplings. Provide anchors and supports where necessary for fastening work into place. Make proper provision for expansion and contraction of pipelines. Keep trenches free of water until joints have been properly made. At the end of each workday, close open ends of pipe temporarily with wood blocks or bulkheads. Do not lay pipe when conditions of trench or weather prevent installation. Depth of cover over top of pipe shall not be less than 4 feet unless otherwise indicated.

3.1.1.4 Installation of Tracer Wire

Install a continuous length of tracer wire for the full length of each run of nonmetallic pipe. Attach wire to top of pipe in such manner that it will not be displaced during construction operations. Tracer wire should be fixed to pipe.

3.1.1.5 Connections to Existing Water Lines

Make connections to existing water lines after approval is obtained and with a minimum interruption of service on the existing line. Make connections to existing lines under pressure as indicated. In no case shall the Contractor shut off the water or operate the fire hydrants or gate valves of the existing distribution system without the expressed permission of Franklin County and coordination with Franklin County. In case it becomes necessary to delay the cut-off, such instructions shall be given and obeyed without recourse. In making connections to the existing distribution system, valves shall be set

as shown on the plan, or at such designated place as Franklin County may direct. If due to unforeseen conditions, these locations have to be changed or additional valves or fittings added, the Contractor shall install the valves or fittings at the new locations at the unit price scheduled in the bid items. Payment for special fittings or couplings will not be made unless approved by Franklin County prior to installation.

3.1.2 Special Requirements for Installation of Water Mains

3.1.2.1 Installation of Ductile-Iron Piping

Unless otherwise specified, install pipe and fittings in accordance with paragraph entitled "General Requirements for Installation of Pipelines" and with the requirements of AWWA C600 for pipe installation, joint assembly, valve-and-fitting installation, and thrust restraint.

A. Push-On Joints: Make push-on joints with the gaskets and lubricant specified for this type joint; assemble in accordance with the applicable requirements of AWWA C600 for joint assembly. Clean gasket and spigot and inside of bell thoroughly to remove all dirt and other foreign matter. Insert gasket furnished by the pipe manufacturer into the gasket seat in the bell. Gasket shall be properly seated in the grooves provided in the pipe bell. Using a non-toxic vegetable soap, apply a film by hand to the inside surface of the gasket that comes into contact with the entering pipe and to the first 1" of the spigot end of the entering pipe. Use only lubricant specified by the pipe manufacturer. Align entering pipe with the bell to which it is to be joined. Enter the spigot end into the bell until it just makes contact with the gasket. Apply sufficient pressure to force the spigot end past the gasket up to solid contact with the bell. When it is necessary to field cut pipe with rubber gaskets, chamfer the cut end 1/8 inch x 30 degrees before inserting into a rubber gasket bell.

B. Mechanical Joints: Make mechanical joints with the gaskets, glands, bolts, and nuts specified for this type joint; assemble in accordance with the applicable requirements of AWWA C600 for joint assembly and the recommendations of Appendix A to AWWA C111/A21.11. Clean last 8" outside the spigot, and the inside of the bell of mechanical joint pipe or fitting to remove oil, grit, tar (other than standard coating) and other foreign matter from the joint and then paint area clean with an approved soap solution. The ductile iron gland shall then be slipped on the spigot end of the pipe with the extension of the gland toward the socket or bell end. The rubber gasket shall be painted with the soap solution and placed on the spigot end with thick edge toward the gland. Push entire section of pipe forward to seat spigot end in the bell. Press gasket into place within the bell, being careful to have the gasket evenly located around the entire joint. Move ductile iron gland along the pipe into position for bolting, insert all bolts, and screw nuts up tightly with fingers. Tighten all nuts with a suitable (preferably torque-limiting) wrench. Tighten nuts that are spaced 180 degrees apart alternately in order to produce equal pressure on all parts of the gland.

C. Flanged Joints: Make flanged joints with the gaskets, bolts, and nuts specified for this type joint. Make flanged joints up tight; avoid undue strain on flanges, fittings, valves, and other accessories. Align bolt holes for each flanged joint. Use full size bolts for the boltholes; use of undersized bolts to make up for misalignment of boltholes or for any other purpose will not be permitted. Do not allow adjoining flange faces to be out of parallel to such degree that the flanged joint cannot be made watertight without overstraining the flange. When

flanged pipe or fitting has dimensions that do not allow the making of a proper-flanged joint as specified, replace it by one of proper dimensions. Use set screwed flanges to make flanged joints where conditions prevent the use of full-length flanged pipe and assemble in accordance with the recommendations of the setscrewed flange manufacturer.

D. Sleeved Joints: Assemble joints made with sleeve-type mechanical couplings in accordance with the recommendations of the coupling manufacturer.

E. Fittings: Fittings shall be installed where and as shown on the plans or as directed by Franklin County. All bends (1/16 to 1/4), y-branches, plugs and all other fittings requiring such shall be sufficiently backed, blocked, or braced to preclude the possibility of their blowing off the main.

F. Pipe Anchorage: Provide concrete thrust blocks (reaction backing) for pipe anchorage. Thrust blocks shall be in accordance with the requirements of AWWA C600 for thrust restraint. Use concrete, ASTM C 94, having a minimum compressive strength of 2,500 psi at 28 days; or use concrete of a mix not leaner than one part cement, 2 1/2 parts sand, and 5 parts gravel, having the same minimum compressive strength. Blocking shall be formed and placed in such a manner that the pressure to be exerted at the point of blocking shall be transferred to firm, undisturbed earth at a maximum load of 2,000 lbs, per square foot. The Contractor shall insure that blocking at all tees, bends, plugs, etc., shall be sufficient to contain all pressure exerted by the pipe up to 200 psi hydraulic pressure within the pipe, e.g., pressure at plug = 200 x (area of pipe in inches). Blocking shall be constructed as shown on the detail sheet contained in the project plans. The Contractor shall also be responsible for any damage or repairs caused by blowouts of any insufficiently blocked pipe.

3.1.2.5 Installation of Valves and Hydrants

A. Installation of Valves: Install gate valves, AWWA C500 and UL 262, in accordance with the requirements of AWWA C600 for valve-and-fitting installation and with the recommendations of the Appendix ("Installation, Operation, and Maintenance of Gate Valves") to AWWA C509. Make and assemble joints to gate valves and check valves as specified for making and assembling the same type joints between pipe and fittings. Valves shall be set and anchored with steel bars and concrete as shown on the detail sheet contained in the project detailed drawings. All valves set by the Contractor shall include a cast iron or ductile iron valve box set to grade encircled and protected by a precast concrete donut.

B. Installation of Hydrants: Install hydrants in accordance with AWWA C600 for hydrant installation and as indicted. Make and assemble joints as specified for making and assembling the same type joints between pipe and fittings. Install hydrants with 4 1/2 inch connections facing the adjacent paved surface. Fire hydrants shall be set where shown on the plans or as directed by Franklin County. The hydrants shall be set upon a bed of compacted crushed stone at least thirty-inches (30") square by ten inches (10") in depth. There shall be furnished and installed an approved restraint assembly to securely anchor the hydrant to the main line as shown on the detail contained in the project drawing details. When the restraint assembly is specified, the cost shall be included in the unit price for hydrants and no concrete blocking will be required. When the hydrant is backfilled, crushed

stone or gravel shall be placed around the hydrant to a point just above the drain holes of the hydrant.

3.1.3 Installation of Water Service Piping

3.1.3.1 Location

Provide individual service laterals as directed by Franklin County Locations shall be staked in the field by the Contractor. New service laterals shall terminate with meter and box located at the edge of the existing street or road right of way.

3.2.3.2 Service Line Connections to Water Mains

Connect service lines to ductile-iron water mains in accordance with AWWA C600 for service taps.

3.1.4 Water Main Sterilization

Sterilization of water mains shall be performed in accordance with the requirements of the North Carolina Department of Environment, and Natural Resources, Rules Governing Public Water Systems, NCAC Title 15A, Subchapter 18C Section .1003 and the requirements of ANSI/AWWA C651-05 or latest revision. The pipe shall be sterilized in segments designated by the Contractor and subject to the approval of Franklin County. All reasonable precautions shall be adhered to in protecting the interior of pipes, fittings, and valves against contamination. All openings in the pipeline shall be closed with watertight plugs at the end of the day's work or at other times when pipe laying has ceased. The lubricant used in the installation of sealing gaskets shall be suitable for use in potable water. If dirt enters the pipe it shall be removed and the interior pipe surface swabbed with a five percent hypochlorite disinfecting solution.

A. Disinfection Procedure: The basic disinfection procedure consists of the following:

    1. Preventing contaminating materials from entering the water main during storage and construction.

    2. Removing, by flushing or other means, those materials that may have entered the water main.

    3. Chlorinating any residual contamination that may remain, and flushing the chlorinated water from the main.

    4. Protecting the existing distribution system from backflow due to pressure test and disinfection procedures.

    5. Determining the bacteriological quality by laboratory test after disinfection.

    6. Final connection of the approved new water main to the active distribution system.

B. Continuous-Feed Method of Chlorination: The "tablet method" and the "slug method" of sterilization are <u>not</u> acceptable. The "continuous-feed method" as discussed in ANSI/AWWA

C651-05 shall be used to chlorinate the water mains. The continuous-feed method of chlorination consists of:

1. Placing calcium hypochlorite granules in the main during construction.

   (a) Calcium hypochlorite granules shall be placed at the upstream end of the first section of pipe, at the upstream end of each branch main and at 500' intervals. The quantity of granules shall be as follows:

Pipe Diameter (Inches)	Calcium Hypochlorite Granules (Ounces)
4	0.5
6	1.0
8	2.0
12	4.0
16 & Larger	8.0

2. Completely filling the main to eliminate air pockets.

   (a) The initial filling shall be at a rate such that water within the main will flow at a velocity no greater than 1 foot per second (fps). Precautions shall be taken to insure that air pockets are eliminated.

3. Flushing the main to remove particulates.

   (a) Once the main has been completely filled with potable water and all air expelled, the main shall be flushed to remove particulates at a rate of not less than 2.5 fps. The discharge point for the flushing operation shall be coordinated with Franklin County. **In lieu of flushing the Contractor may choose this time to clean the water main as described in the following paragraph (b) entitled "Cleaning of Water Mains"**

   (b) **Cleaning of Water Mains:** *The Contractor shall clean all new water mains installed in this project by using a flexible polyurethane swab ("pig"). The pig shall be of 5 lb/cf density polyurethane of the proper size for the water mains being cleaned. The pig shall be inserted into the first section of pipe and shall remain there until construction of that line segment is completed. Cleaning shall be accomplished by propelling the pig down the water main by system pressure to the exit point as determined by the Contractor. After the pig exits the pipe, flushing shall be performed until the water is completely clear and the turbidity level is less than 1.0 NTU. Cleaning of water mains with diameters larger than 12 inches or water mains that utilize butterfly valves shall be performed in the same manner excepting that the Contractor will be required to pig the main from valve to valve or in a manner acceptable to the Engineer and the Owner.*

4. Filling the main with super-chlorinated potable water so that after a 24-hour holding period in the main there will be a free chlorine residual of not less than 20 parts per million (ppm).

   (a) The procedure for chlorinating the main shall begin with water being made to flow into the newly installed water main at a constant, measured rate. In the absence of a meter the rate may be approximated by a method approved by Franklin County (A hydrant meter is recommended). At a point not more than 10' downstream from the beginning of the new main, water entering the new main shall receive a dose of chlorine fed at a constant rate such that the water will have not less than 50-ppm free chlorine. The chlorine concentration should be measured at regular intervals using appropriate chlorine test kits. Chlorine application shall not cease until the entire main (or isolated portion thereof) is filled with heavily chlorinated water. The chlorinated water shall be retained in the main for at least 24 hours during which time all valves and hydrants in the treated section shall be operated to ensure disinfection of the appurtenances. At the end of this 24-hour period, the treated water in all portions of the main shall have a residual of not less than 20-ppm free chlorine.

      (1) Chlorine Application: The forms of chlorine that may be used in the disinfection operations are liquid chlorine conforming to ANSI/AWWA B301, sodium hypochlorite solution conforming to ANSI/AWWA B300 and calcium hypochlorite granules or tablets conforming to ANSI/AWWA B300. Liquid Chlorine shall be used only in combination with appropriate gas-flow chlorinators and ejectors and under the direct supervision of a person who is familiar with the physiological, chemical, and physical properties of liquid chlorine. Liquid chlorine may be used only when appropriate safety practices are observed to protect working personnel and the public. Sodium Hypochlorite Solution and Calcium Hypochlorite Granules used to form a solution may be applied to the water to be chlorinated with a gasoline or electrically powered chemical-feed pump designed for feeding chlorine solutions. Feed lines shall be able to withstand the corrosion caused by the concentrated chlorine solutions and the maximum pressures created by the pump.

5. Final flushing of the water main to remove super-chlorinated water.

   (a) After the applicable retention period, heavily chlorinated water should not remain in prolonged contact with pipe. In order to prevent damage to the pipe lining or corrosion damage to the pipe itself, the heavily chlorinated water shall be flushed from the main until chlorine measurements show that the concentration in the water leaving the main is no higher than that generally prevailing in the system or is acceptable for domestic use. The environment to which the chlorinated water is to be discharged shall be inspected. If there is any question that the chlorinated discharge will cause damage to the environment, then a reducing agent shall be applied to the water to be wasted to neutralize thoroughly the chlorine residual remaining in the water. (See AWWA C-651 Appendix B for neutralizing chemicals). Where necessary, Federal, State and local

regulatory agencies should be contacted to determine special provisions for the disposal of heavily chlorinated water. This effort shall be coordinated fully by the by Contractor.

C. Bacteriological Tests: Twenty-four hours after final flushing to remove excess chlorine, representative water samples shall be taken from each water line segment for bacteriological quality tests in accordance with "Standard Methods for the Examination of Water and Wastewater". At least one sample shall be collected from every 2000' of water main including one set from the end of the line and at least one set from each branch. No portion of the system shall be placed in operation until the tests are approved. If the presence of coliform bacteria is detected in the water samples, the section of pipe shall be re-sterilized and additional samples shall be taken. If, during construction, trench water has entered the main, or if in the opinion of Franklin County, excessive quantities of dirt or debris have entered the main, bacteriological samples may be required at more frequent intervals. Furthermore at the discretion of Franklin County samples shall be taken of water that has stood in the main for at least 72 hours after final flushing has been completed. If the initial disinfection fails to produce satisfactory bacteriological samples, the main may be re-flushed and shall be resampled. If check samples show the presence of coliform organisms, then the main shall be re-chlorinated by the continuous-feed of chlorination until satisfactory results are obtained.

All bacteriological tests from each tested segment of water main shall be delivered to and tested by a NC Department of Health and Human Service Approved Laboratory. Approved or Certified municipal and private laboratories can be found on the following web-address.

http://slphreporting.ncpublichealth.com/EnvironmentalSciences/Certification/CertifiedLaboratory.asp .

3.2 FIELD QUALITY CONTROL

3.2.1 Field Tests and Inspections

Franklin County will conduct field inspections and witness field tests specified in this section. The Contractor shall perform field tests, and provide labor, equipment, and incidentals required for testing. The Contractor shall produce evidence, when required, that any item of work has been constructed in accordance with the drawings and specifications. Do not begin testing on any section of a pipeline where concrete thrust blocks have been provided until at least 5 days after placing of the concrete. Water for testing and sterilization may be purchased from Franklin County.

3.2.2 Pressure and Leakage Testing

Hydrostatic pressure and leakage testing for water mains and water service lines shall conform to ANSI/AWWA C600-10 or latest revision for ductile iron water main and ANSI/AWWA C605-11 or latest revision for polyvinyl chloride pipe. Leakage test may be performed at the same time and at the same test pressure as the pressure test. Pressure testing shall be performed on all pipe, valves, hydrants, and fittings. The test shall be conducted on line segments from shut valve to shut valve in segments not exceeding 2,000 linear feet. The Contractor shall provide a suitable pump for applying pressure and an accurate gauge for measuring the pressure and an Engineer approved method of

determining volume of water used. All newly laid pipe and any isolated sections thereof shall be subject to a hydrostatic pressure of at least 1.5 times the working pressure at the point of testing or 200 psi (whichever is greater). At the same time the test pressure shall not be less than 1.25 times the working pressure at the highest point along the test section. The hydrostatic test shall be of at least two-hour duration. Removal of air shall be performed to the satisfaction of Franklin County through use of the air release valve assemblies (automatic and manual) and the fire hydrants. Prior to the pressure test, fill that portion of the pipeline being tested with water for a soaking period of not less than 24 hours. If determined necessary by Franklin County, the Contractor shall install additional air taps to be abandoned after all air removal at no additional cost to Franklin County. Leakage shall be defined as the quantity of water that must be supplied into the newly laid pipe or any isolated section thereof to maintain pressure within 5 psi (35 MPa or 0.35 bar) of the specified test pressure after the pipe has been filled with water and the air has been expelled. Leakage shall not be measured by a drop in pressure in a test section over a period of time. No installation will be accepted if the leakage is greater than that determined by the following formulas:

When testing Ductile Iron Pipe:

$$L = \frac{SD \sqrt{P}}{148{,}000}$$

Where:

L = allowable leakage, in gallons per hour
S = length of pipe tested, in feet
D = nominal diameter of the pipe, in inches
P = average test pressure during the leakage test, in pounds per square inch gauge)

When testing against closed metal-seated valves, an additional leakage per closed valve of 0.0078 gph/in. (0.0012 L/h/m) of nominal valve size shall be allowed. Acceptance shall be determined on the basis of allowable leakage. If any test of laid pipe discloses leakage greater than that specified above, the Contractor shall, at his own expense, locate and make approved repairs as necessary until the leakage is within the specified allowance. All visible leaks are to be repaired, regardless of the amount of leakage.

--End of Section—

DETAILED SPECIFICATIONS

SECTION 2: SANITARY SEWERAGE

PART 1 GENERAL

1.1 REFERENCES

The publications listed below form a part of this specification to the extent referenced. The publications are referred to in the text by the basic designation only. Latest Revisions shall be applicable to all references.

AMERICAN NATIONAL STANDARDS INSTITUTE (ANSI)

ANSI B18.5.2.1M	Metric Round Head Short Square Neck Bolts

AMERICAN SOCIETY OF MECHANICAL ENGINEERS (ASME)

ASME/ANSI B16.1	Cast Iron Pipe Flanges and Flanged Fittings
ASME/ANSI B18.2.2	Square and Hex Nuts (Inch Series)
ANSI/ASME B18.5.2.2M	Metric Round Head Square Neck Bolts

AMERICAN SOCIETY FOR TESTING AND MATERIALS (ASTM)

ASTM A 47	Ferritic Malleable Iron Castings
ASTM A 48M	Gray Iron Castings (Metric)
ASTM A 48	Gray Iron Castings
ASTM A 126	Standard Specification for Grey Iron Castings for Valves, Flanges and Pipe Fittings
ASTM A 307	Carbon Steel Bolts and Studs, 60,000 psi Tensile Strength
ASTM A 536	Ductile Iron Castings
ASTM A 746	Ductile Iron Gravity Sewer Pipe
ASTM C 14	Concrete Sewer, Storm Drain, and Culvert Pipe
ASTM C 94	Ready-Mixed Concrete

ASTM C 150	Portland Cement
ASTM C 478M	Precast Reinforced Concrete Manhole Sections (Metric)
ASTM C 478	Precast Reinforced Concrete Manhole Sections
ASTM C 923M	Resilient Connectors Between Reinforced Concrete Manhole Structures, Pipes and Laterals (Metric)
ASTM C 923	Resilient Connectors Between Reinforced Concrete Manhole Structures, Pipes and Laterals
ASTM C 990	Joints for Concrete Pipe, Manholes, and Precast Box Sections Using Preformed Flexible Joint Sealants
ASTM C 990M	Joints for Concrete Pipe, Manholes, and Precast Box Sections Using Preformed Flexible Joint Sealants (Metric)
ASTM D 1784	Rigid Polyvinyl Chloride) (PVC) Compounds and Chlorinated Polyvinyl Chloride) (CPVC) Compounds
ASTM D 1785	Polyvinyl Chloride) (PVC) Plastic Pipe, Schedules 40, 80, and 120
ASTM D 2241	(Polyvinyl Chloride) (PVC) Pressure-Rated Pipe (SDR Series)
ASTM D 2321	Underground Installation of Thermoplastic Pipe for Sewers and Other Gravity-Flow Applications
ASTM D 2412	Determination of External Loading Characteristics of Plastic Pipe by Parallel-Plate Loading
ASTM D 2464	Threaded Polyvinyl Chloride) (PVC) Plastic Fittings, Schedule 80
ASTM D 2466	Polyvinyl Chloride) (PVC) Plastic Pipe Fittings, Schedule 40
ASTM D 2467	Socket-Type Polyvinyl Chloride) (PVC) Plastic Pipe Fittings, Schedule 80

ASTM D 3034	Type PSM Polyvinyl Chloride) (PVC) Sewer Pipe and Fittings
ASTM D 3139	Joints for Plastic Pressure Pipes Using Flexible Elastomeric Seals
ASTM D 3212	Joints for Drain and Sewer Plastic Pipe Using Flexible Elastomeric Seals
ASTM F 402	Safe Handling of Solvent Cements, Primers, and Cleaners Used for Joining Thermoplastic Pipe and Fittings
ASTM F 477	Elastomeric Seals (Gaskets) for Joining Plastic Pipe
ASTM F 949	Polyvinyl Chloride) (PVC) Corrugated Sewer Pipe with a Smooth Interior and Fittings

AMERICAN WATER WORKS ASSOCIATION (AWWA)

AWWA C104/A21.4	Cement-Mortar Lining for Ductile-Iron Pipe and Fittings for Water
AWWA C110/A21.10	Ductile-Iron and Gray-Iron Fittings, 3 in. Through 48 in. (75 mm Through 1200 mm), for Water and Other Liquids
AWWA C111/A21.11	Rubber-Gasket Joints for Ductile-Iron Pressure Pipe and Fittings
AWWA C115/A21.15	Flanged Ductile-Iron Pipe with Ductile-Iron or Gray-Iron Threaded Flanges
ANSI/AWWA C151/A21.51	Ductile-Iron Pipe, Centrifugally Cast, for Water or Other Liquids
AWWA C153/A21.53	Ductile-Iron Compact Fittings, 3 in. Through 24 in. (76 mm Through 610 mm) and 54 in. Through 64 in. (1,000 mm Through 1,600 mm), for Water Service
AWWA C509	Resilient-Seated Gate Valves for Water and Sewerage Systems
AWWA C600	Installation of Ductile-Iron Water Mains and Their Appurtenances

AWWA C606	Grooved and Shouldered Joints
AWWA C900	PVC Pressure Pipe
AWWA M23	PVC Pipe - Design and Installation

UNI-BELL PVC PIPE ASSOCIATION (UBPPA)

UBPPA UNI-B-3	Installation of Polyvinyl Chloride (PVC) Pressure Pipe
UBPPA UNI-B-6	Low-Pressure Air Testing of Installed Sewer Pipe

1.2 DESIGN REQUIREMENTS

1.2.1 General

A full hydraulic analysis utilizing computer modeling techniques will be required for all improvements to the Franklin County sewer system. A complete evaluation of the effect to downstream sewers will be required. The following general guidelines for design and materials shall be adhered to.

1. Force Main pipe material shall be Ductile Iron or PVC. Requirements for ductile iron pipe class can be found in the paragraphs below. All PVC pipe 4" through 12" shall be a minimum classification of AWWA C900 DR 18 (Class 150). 2" PVC pipe shall be CL 200.
2. Isolation valves shall have a minimum spacing of 1,000'.
3. Maximum manhole spacing shall be 400'.
4. Minimum depth of bury for water mains shall be 4'.
5. All force main crossing under storm drain shall be ductile iron.
6. Force mains shall not be installed under pavement section, curb and gutter, or sidewalk.
7. Force Main PVC will be green with green dig tape.
8. Force Main to Force Main connections will not be allowed. Force Mains should discharge into a sewer manhole or lift station.

1.3 SYSTEM DESCRIPTION

1.3.1 Sanitary Sewer Gravity Pipeline, Force Main, and Services

Install new sanitary sewer gravity mains, force main, manholes and service lateral lines. Gravity sewer mains shall be of polyvinyl chloride (PVC) and ductile iron pipe. Force main shall be of ductile iron and polyvinyl chloride. Service lateral piping shall be PVC, schedule 40 (4" diameter unless otherwise indicated). Manholes shall be pre-cast concrete manholes (4' diameter unless indicated otherwise. Inside drops and manhole depth over 12' need to be 5' diameter). Materials, installation and workmanship shall be as specified herein.

1.4 SUBMITTALS

Submit six (6) copies of the following to Franklin County for approval before beginning construction.

1.4.1 Product Data

Submit manufacturer's standard drawings or catalog cuts.

A. Pipeline materials including joints, fittings, and couplings.

B. Gate Valves, Check Valves, and Air/Vacuum Valves.

1.4.2 Shop Drawings

A. Precast concrete manhole.

B. Metal items.

1.5 DELIVERY, STORAGE, AND HANDLING

1.5.1 Delivery and Storage

1.5.1.1 Piping

Inspect materials delivered to site for damage; store with minimum of handling. Store materials on site in enclosures or under protective coverings. Store plastic piping and jointing materials and rubber gaskets under cover out of direct sunlight. Do not store materials directly on the ground. Keep inside of pipes and fittings free of dirt and debris.

1.5.2 Handling

Handle pipe, fittings, and other accessories in such manner as to ensure delivery to the trench in sound undamaged condition. Take special care not to damage linings of pipe and fittings; if lining is damaged, make satisfactory repairs. Carry, do not drag pipe to trench.

PART 2 PRODUCTS

2.1 PIPELINE MATERIALS

2.1.1 Ductile Iron Gravity Sewer Pipe and Associated Fittings

2.1.1.1 Ductile Iron Gravity Pipe and Fittings

Ductile Iron Pipe shall be Pressure Class 350 and shall conform to ASTM A 746. Fittings shall conform to AWWA C110/A21.10 or AWWA C153/A21.53. Fittings shall have strength at least

equivalent to that of the pipe. Ends of pipe and fittings shall be suitable for the joints specified hereinafter. Pipe and fittings shall have cement-mortar lining conforming to AWWA C104/A21.4, standard thickness.

2.1.1.2 Ductile Iron Gravity Joints and Jointing Materials

Pipe and fittings shall have push-on joints or mechanical joints, except as otherwise specified in this paragraph. Mechanical joints only shall be used where indicated. Push-on joint pipe ends and fitting ends, gaskets, and lubricant for joint assembly shall conform to AWWA C111/A21.11. Mechanical joint requirements for pipe ends, glands, bolts and nuts, and gaskets shall conform to AWWA C111/A21.11.

2.1.2 Polyvinyl Chloride (PVC) Plastic Gravity Sewer Piping

2.1.2.1 PVC Plastic Gravity Pipe and Fittings

For pipe diameters larger than 15" PVC corrugated pipe with a smooth interior shall conform to the requirements of ASTM F949-99 (or latest revision), with ends suitable for elastomeric gasket joints. The pipe and fittings shall be homogeneous throughout and free from visible cracks, holes, foreign, inclusions or other injurious defects. Minimum pipe stiffness when measured in accordance with ASTM Test Method D2412 shall be 50 psi. There shall be no evidence of splitting, cracking or breaking when the pipe is tested per ASTM Test Method D2412 at 60 percent flattening. The pipe shall be made of PVC compound having a minimum cell classification of 12454B as defined in ASTM Specification D1784. All manufactures of PVC sewer pipe must be pre-qualified at least 10 days prior to bid opening to be considered as approved material suppliers. Pre-qualification submittals must demonstrate a minimum 2 years experience of manufacturing proposed pipe material, pipe performance history including a project installation list with at least five (5) successful sanitary sewer installations in excess of 3000' per project, product literature and installation recommendations.

PVC pipe 15" or below shall conform to ASTM 3034, SDR 35 or SDR 26 with ends suitable for elastomeric gasket joints.

2.1.2.2 PVC Plastic Gravity Joints and Jointing Material

Large Diameter PVC Joints shall conform to ASTM F949-99 Section 5.2.3. Gaskets shall conform to ASTM F 477.

Small Diameter PVC Joints shall conform to ASTM D 3212. Gaskets shall conform to ASTM F 477.

2.1.3 PVC Plastic Pipe and Fittings for Service Laterals and Cleanouts

Pipe and fittings shall be solid wall manufactured from virgin rigid PVC vinyl compounds with a Cell Class o 12454-B as identified in ASTM D-1784. Pipe shall be PVC Schedule 40, Iron Pipe size (ips) conforming to ASTM D-2665. Pipe and fittings shall be manufactured to the normal dimension cited in the ASTM Standard.

2.1.3.1 Connections to Sewer Main

A. PVC Sewer Mains: Provide a wye or tee-wye fitting meeting above requirements for sewer mains to correspond with appropriate service lateral size.

B. Ductile Iron Pipe Sewer Mains: Provide compression-fit or saddle type service connection specifically designed for use with ductile iron pipe specified for sewer main installation.

2.1.4 Ductile Iron Pressure Pipe for Sewer Force Mains

Ductile iron pipe shall conform to ANSI/AWWA C151/A21.51, Pressure Class 350 for 12" diameter pipe and smaller. Flanged ductile iron pipe shall conform to AWWA C115/A21.15. Mechanical Joint fittings shall conform to AWWA C110/A21.10 or AWWA C153/A21.53. Fittings with push-on joint ends shall conform to the same requirements as fittings with mechanical-joint ends, except that the bell design shall be modified, as approved, for push-on joint. Fittings shall have pressure rating at least equivalent to that of the pipe. Ends of pipe and fittings shall be suitable for the joints specified hereinafter. Pipe and fittings shall have cement-mortar lining conforming to AWWA C104/A21.4, standard thickness.

2.1.4.1 Ductile Iron Pressure Pipe Joints

Joints for pipe shall be push-on joints unless otherwise indicated. Joints at fittings shall be mechanical joints unless otherwise indicated. Joints made with sleeve-type mechanical coupling may be used in lieu of push-on joint, subject to the limitations specified in paragraph entitled "Sleeve-Type Mechanical Couplings."

A. Push-On Joints: Shape of pipe ends and fitting ends, gaskets, and lubricant for joint assembly, AWWA C111/A21.11.

   1. Restrained Push-On Joints: Restrained push-on joints for pipe where indicated shall be designed for a working pressure of 350 psi for 4"-24" pipe. Restrained push-on joints shall be capable of being deflected a minimum of 4 degrees after assembly for pipe through 12" and 3 degrees for pipe 14" – 24". Restrained push-on joints shall be manufactured, <u>not by specialized gripping segment gasket installation</u>.

B. Mechanical Joints: Dimensional and material requirements for pipe ends, glands, bolts and nuts, and gaskets, AWWA C111/A21.11.

   1. Restrained Flexible Bolted Joints: Restrained mechanical joint pipe (and connections to MJ fittings and valves) shall utilize a flexible bolted joint designed for a working pressure of 350 psi for 4" –24" pipe. Restrained flexible bolted joints shall be capable of being deflected a minimum of 4 degrees for pipe through 12", 3 degrees for 14" and 16" pipe, 2.5 degrees for 18" and 20" pipe and 2 degrees for pipe 24" through 36".

C. Flanged Joints: Bolts, nuts, and gaskets for flanged connections as recommended in the Appendix to AWWA C115/A21.15. Flange for setscrewed flanges shall be of ductile iron, ASTM A 536, Grade 65-45-12, and conform to the applicable requirements of ASME/ANSI B16.1, Class 250. Setscrews for setscrewed flanges shall be 190,000-psi tensile strength, heat

treated and zinc-coated steel. Gasket for setscrewed flanges shall conform to applicable requirements for mechanical-joint gaskets specified in AWWA C111/A21.11. Design of setscrewed gasket shall provide for confinement and compression of gasket when joint to adjoining flange is made.

D. Sleeve-Type Mechanical Coupled Joints: As specified in paragraph entitled "Sleeve-Type Mechanical Couplings."

2.1.5 PVC Plastic Pressure Pipe for Sewer Force Mains

2.1.5.1 AWWA C900 Standard Dimension Ratio 18

PVC pipe shall conform to ANSI/AWWA C900-97 or latest revision for polyvinyl chloride pressure pipe sizes 4 inch through 12 inch. Class 150, DR 18 pipe as called for on the plans or in the schedule bid items shall be furnished. The pipe shall be plainly marked with the following information: manufacturer's name, size, material (PVC) type and grade or compound, NSF seal, pressure class and reference to appropriate product standards. Pipe shall be furnished in 20 ft. laying lengths. Random lengths shall be a minimum of 10 feet long and shall comprise no more than 15 percent of the length of the piping system. Pipe shall be furnished in factory-packaged units. Pipe shall not fail when subjected to the following tests; (1) sustained pressure (2) burst pressure (3) flattening and extrusion quality. Tests shall be conducted as outlined in ANSI/AWWA C900-97. Each length of PVC pipe shall pass a hydrostatic integrity test at the factory of 4 times the pressure class of the pipe for 5 seconds.

2.1.5.3 PVC Plastic Pressure Pipe Joints

Joints for pipe shall be push-on joints. Joints at fittings shall be mechanical joints unless otherwise indicated.

2.1.6 High-Density Polyethylene Pipe and Fittings.

HDPE pipe and fittings shall conform to AWWA C906-99 for polyethylene pressure pipe and fittings 4" through 63". 12" DIPS DR 11 pipe as indicated by the plans shall be furnished. HDPE pipe shall be manufactured from resin with a cell classification of PE 345464C according to ASTM D 3350-02. Pipe will be legibly marked at intervals of no more than five feet with the manufacturer's name, trademark, pipe size, HDPE cell classification, appropriate legend (DR #, ASTM and AWWA Standards and NSF seal), date of manufacture and point of origin. Pipe not marked as indicated above will be rejected. The material used in the production of potable water pipe shall be approved by the National Sanitation Foundation (NSF).

2.1.6.1 HDPE Pipe Joints

Butt fusion or Electrofusion welded in accordance with ASTM D3261.

2.1.7 Ductile Iron Fittings for Ductile Iron and PVC Plastic Pressure Pipe

Ductile iron fittings shall conform to ANSI A 21.10 (AWWA C-110), latest revision with the exception of the manufacturer's design dimensions and thickness. Fittings shall have a working pressure rating of 350 psi for fittings, 12 inch and under and 250 psi for fittings over 12 inch.

Ductile iron shall conform to ASTM A-536, latest revision, Grade 70-50-05. Nominal thickness of the fittings shall be equal to Class 51 ductile iron pipe as specified in ANSI A 21.51 (AWWA C-151). Fittings shall have a cement mortar lining and seal coating conforming to ASNI A 21.4 (AWWA C-104), latest revision. Fittings shall have an outside coating of bituminous material in accordance with the manufacturer's specifications. The final coat shall be continuous and smooth being neither brittle when subjected to low temperatures nor sticky when exposed to hot sun. The coating shall be strongly adherent to the pipe at all temperatures. Fittings shall have mechanical or flanged joints as indicated and specified herein.

2.1.7.1 Mechanical Joint Fittings

ANSI Specification A 21.11 (AWWA C-111), latest revision, for three inch pipe and larger. Bolted mechanical joint fittings shall be used with ductile iron pipe, PVC pipe, and where specifically called for on the plans or in the Schedule of Bid Items.

A. Restrained Flexible Bolted Joint (DIP only): Restrained MJ fittings shall be designed for a working pressure of 350 psi for 4"-24" ductile iron pipe. Fittings such as these shall be part of a manufactured flexible bolted pipe restraint system as described above for MJ ductile iron pipe.

B. Megalug Restraint for MJ Fittings (DI or PVC Pipe): Mega Lugs may be used for restraint of mechanical joint fittings. The restraint mechanism shall consist of a plurality of individually actuated gripping surfaces to maximize restraint capability. Glands shall be manufactured of ductile iron conforming to ASTM A536-80. The gland shall be such that it can replace the standardized mechanical joint gland and can be used with the standardized mechanical joint bell. Twist off nuts, sized the same as tee-head bolts shall be used to insure proper actuating of restraining devices. The restraining glands shall have a pressure rating equal to that of the pipe on which it is used. When mechanical thrust restraints are used concrete thrust blocking shall be deleted from the installation.

2.1.7.2 Flanged Joint Fittings

Flanged fittings shall be constructed of ductile iron with flanges drilled and faced per ANSI B 16.1 for both 125 Lb. working pressure.

2.1.8 Sleeve-Type Mechanical Couplings for Pressure Pipe

Couplings shall be designed to couple plain-end piping by compression of a ring gasket at each end of the adjoining pipe sections. The coupling shall consist of one middle ring flared or beveled at each end to provide a gasket seat; two follower rings; two resilient tapered rubber gaskets; and bolts and nuts to draw the follower rings toward each other to compress the gaskets. The middle ring and the follower rings shall be true circular sections free from irregularities, flat spots, and surface defects; the design shall provide for confinement and compression of the gaskets. For ductile iron and PVC plastic pipe, the middle ring shall be of cast-iron or steel; and the follower rings shall be of malleable or ductile iron. Cast iron, ASTM Malleable and ductile iron shall, conform to ASTM A 47 and ASTM A 536, respectively. Steel shall have a strength not less than that of the pipe. Gaskets shall be designed for resistance to set after installation and shall meet the applicable requirements specified for gaskets for mechanical joint in AWWA C111/A21.11. Bolts shall be track-head type,

ASTM A 307, Grade A, with nuts, ASTM A 563, Grade A; or round-head square-neck type bolts, ANSI B18.5.2.1M and ANSI/ASME B18.5.2.2M with hex nuts, ASME/ANSI B18.2.2. Bolts shall be 5/8 inch in diameter; minimum number of bolts for each coupling shall be 8 for 12-inch pipe, 8 for 8-inch pipe, and 6 for 6-inch pipe. Boltholes in follower rings shall be of a shape to hold fast the necks of the bolts used. Mechanically coupled joints using a sleeve-type mechanical coupling shall not be used as an optional method of jointing except where pipeline is adequately anchored to resist tension pull across the joint.

2.1.9 Pressure Pipe Appurtenances

2.1.9.1 Gate Valves

Gate valves shall be manufactured to meet or exceed the requirements of ANSI/AWWA C509-94 or latest revision for 2" –16" valves. All valves shall be of iron body, bronze mounted, resilient-seat type. The sealing mechanism shall provide zero leakage at the water working pressure against line flow from either direction. Valves shall be manufactured with "O" Ringstem seals. The area between the "O"-Rings shall be filled with lubricant. Anti-friction washers shall be provided at the stem collar for inside screw design. Valves for buried use shall be nonrising stem (NRS) with 2-inch square operating nut. Valves for aboveground use or for use inside vaults shall be NRS design with handwheel. Valves shall open by turning in a counterclockwise direction. The minimum valve design working water pressure shall be 200 psi. Valves shall be shell tested at 400 psi. Valve ends for buried use with Ductile Iron pipe and PVC pipe shall be bolted mechanical joint. Valve ends for use in above ground or vault installations shall be flanged joint. Valves for buried use on Ductile Iron pipe fire hydrant legs shall be bolted mechanical joint. Resilient-seated gate valves shall be manufactured by Clow.

A. Valve Boxes: Adjustable valve boxes shall be of equal quality and workmanship to those manufactured by Mueller Company, or Resselaer Valve Company. Valve boxes shall be of close-grained gray cast iron. The valve boxes shall be the two-piece screw type and the cover or cap shall have cast on the upper surface in raised letters the word "Sewer". Valve boxes shall be painted with a coat of protective asphaltum paint before being shipped from the factory. Concrete protector rings shall be placed around valve boxes.

B. Indicator Posts: UL 789. Provide for gate valves where indicated.

2.1.9.2 Check Valves

Check valves installed in above ground vault installations shall be of the swing full body flanged type, with a domed access cover and only one moving part, the valve disc. The valve body shall have full flow equal to the nominal pipe diameter at any point, through the valve. The seating surface shall be on a 45° angle to minimize disc travel. The top access port shall be full size, allowing removal of the disc without removing the valve from the pipeline. The access cover shall be domed in shape, to allow the disc to be fully operational in lines containing a high solids content. The disc shall be of one-piece construction, precision molded with an integral O-ring type sealing surface and contain steel and nylon reinforcements in the hinge and disc areas. The flex portion of the disc shall be warranted for twenty-five years. Non-slam closing characteristic shall be provided through a short 35° disc stroke and a memory retentive disc return action. Provisions shall be made for backflow capability. Provide all special tools, accessories, etc. required to back flush the valve. The valve body

and cover shall be ASTM A126 Class B cast iron. The disc shall be Buna-N (NBR) ASTM D2000-BG. The interior of the valve shall be coated with an epoxy. The exterior shall be coated with a universal primer. The valve shall be Series 500 as manufactured by Val-Matic Valve and Manufacturing Corporation or approved equal.

2.1.9.3 Air and Vacuum Valves for Sewage

The Contractor shall furnish and install air vacuum/pressure air release valve assemblies where shown on the drawings. Air/vacuum valve assemblies shall include an air and vacuum valve, pressure air release valve, gate valve, manhole, piping, corporation stop, fittings and appurtenances required for a complete and operable installation. The air and vacuum pressure air release valve shall be constructed of cast iron with stainless steel trim and stainless steel float, and all working parts shall be bronze, brass, stainless steel, or other corrosion resistant material. The valves shall be designed for a minimum working pressure of 150 PSI and a test pressure of 200 PSI. The valves shall include isolation valve and back flushing attachments, which shall consist of blow-off valves, quick, disconnect couplings, and a minimum of 4 feet of rubber hose suitable for back flushing without dismantling the valve. All valves 1 inch diameter and larger shall have a ¼ inch minimum diameter drain plug. A protective hood shall be supplied on each air/vacuum valve to prevent debris from entering that valve outlet. The pressure air release valve shall have a 2-inch minimum threaded connection and a minimum orifice of ¼ inch diameter, and also be furnished with back flushing provisions. Each valve assembly shall include a gate valve conforming to the preceding specifications and be installed in a manhole as shown on the detail sheet. Acceptable valves shall be of equal quality and workmanship to those manufactured by Crispin, APCO or Valmatic.

2.1.9.4 Tracer Wire for Nonmetallic Piping

Provide bare copper or aluminum wire not less than 0.10 inch in diameter in sufficient length to be continuous over each separate run of nonmetallic pipe and fixed to pipe.

2.2 MISCELLANEOUS MATERIALS

2.2.1 Precast Concrete and Associated Materials

2.2.1.1 Precast Concrete Manhole Sections

Precast concrete manhole risers, base sections, and tops shall conform to ASTM C 478. Base and first riser shall be monolithic.

2.2.1.2 Gaskets and Connectors

Gaskets for joints between manhole sections shall conform to ASTM C 443. Resilient connectors for making joints between manhole and pipes entering manhole shall conform to ASTM C 923.

2.2.2 Metal Items

2.2.2.1 Manhole

Manhole frames and covers shall be designed for heavy traffic weighting not less than 310 lbs. Iron shall be tough, dense and even grained, cast in a true symmetrical pattern free from defects of any kind.

2.2.2.2 Manhole Steps

Zinc-coated steel conforming to 29 CFR 1910.27. As an option, plastic or rubber coating pressure-molded to the steel may be used. Plastic coating shall conform to ASTM D 4101, copolymer polypropylene. Rubber shall conform to ASTM C 443, except shore a durometer hardness shall be 70 plus or minus 5. Aluminum steps or rungs will not be permitted. Steps are not required in manholes less than 4 feet deep.

PART 3 EXECUTION

3.1 INSTALLATION OF PIPELINES AND APPURTENANT CONSTRUCTION

3.1.1 General Requirements for Installation of Pipelines

These requirements shall apply to all PVC and Ductile Iron pipeline installation except where specific exception is made in the "Special Requirements..." paragraphs. HDPE pipe installation specifications as part of directional bores is described in Section 3 “Earthwork and Borings” for utilities. The Contractor shall furnish all labor, tools, equipment and other incidentals required for the construction of the sewer collection and force main system as shown on the drawings and as specified herein. The work shall include laying pipe and setting fittings, valves, services, and testing of the sewer system. Materials shall be as specified in previous sections of these specifications.

Apply except where specific exception is made in the following paragraphs entitled "Special Requirements."

3.1.1.1 Location

The work covered by this section shall terminate at the edge of the existing street or utility easement right-of-way as indicated on the plan drawings.

A. Sanitary piping installation parallel with water line:

1. Normal conditions: Sanitary piping or manholes shall be laid at least 10 feet horizontally from a water line whenever possible. The distance shall be measured edge-to-edge.

2. Unusual conditions: When local conditions prevent a horizontal separation of 10 feet, the sanitary piping or manhole may be laid closer to a water line provided that:

(a) The top (crown) of the sanitary piping shall be at least 18 inches below the bottom (invert) of the water main.

(b) Where this vertical separation cannot be obtained, the sanitary piping shall be constructed of AWWA-approved ductile iron water pipe pressure tested in place without leakage prior to backfilling.

(c) The sewer manhole shall be of watertight construction and tested in place.

B. Installation of sanitary piping crossing a water line:

1. Normal conditions: Lay sanitary piping crossing water lines to provide a separation of at least 24 inches between the top of the sanitary piping and the bottom of the water line whenever possible.

2. Unusual conditions: When local conditions prevent a vertical separation described above, use the following construction:

(a) Sanitary piping passing over or under water lines shall be constructed of AWWA-approved ductile iron water pipe, pressure tested in place without leakage prior to backfilling.

(b) Sanitary piping passing over water lines shall, in addition, be protected by providing:

(1) A vertical separation of at least 24 inches between the bottom of the sanitary piping and the top of the water line.

(2) Adequate structural support for the sanitary piping to prevent excessive deflection of the joints and the settling on and breaking of the water line.

(3) That the length, minimum 20 feet, of the sanitary piping be centered at the point of the crossing so that joints shall be equidistant and as far as possible from the water line.

(c) Sanitary sewer manholes: No water piping shall pass through or come in contact with any part of a sanitary sewer manhole.

3.1.1.2 Earthwork

Perform earthwork operations in accordance with Section 3, "Earthwork and Borings for Utilities."

3.1.1.3 Pipe Laying and Jointing

Inspect each pipe and fitting before and after installation; replace those found defective and remove from site. Provide proper facilities for lowering sections of pipe into trenches. Lay nonpressure pipe with the bell ends in the upgrade direction. Adjust spigots in bells to give a uniform space all around. Blocking or wedging between bells and spigots will not be permitted. Replace by one of the proper dimensions, pipe or fittings that do not allow sufficient space for installation of joint

material. Do not joint dislike pipe types together (example: PVC to DI, DI to PVC, etc.) Use sleeves and MJ fittings to joint dislike pipe types. At the end of each workday, close open ends of pipe temporarily with wood blocks or bulkheads. Provide batter boards not more than 25 feet apart in trenches for checking and ensuring that pipe invert elevations are as indicated. Laser beam method may be used in lieu of batter boards for the same purpose.

3.1.1.4 Connections to Existing Lines

Obtain approval from Franklin County before making connection to existing line. Conduct work so that there is minimum interruption of service on existing line.

3.1.2 Special Requirements

3.1.2.1 Installation of Ductile Iron Gravity Sewer Pipe

Unless otherwise specified, install pipe and associated fittings in accordance with paragraph entitled "General Requirements for Installation of Pipelines" of this section and with the requirements of AWWA C600 for pipe installation and joint assembly.

A. Make push-on joints with the gaskets and lubricant specified for this type joint and assemble in accordance with the applicable requirements of AWWA C600 for joint assembly. Make mechanical-joints with the gaskets, glands, bolts, and nuts specified for this type joint and assemble in accordance with the applicable requirements of AWWA C600 for joint assembly and the recommendations of Appendix A to AWWA C111/A21.11.

3.1.2.2 Installation of PVC Plastic Gravity Sewer Pipe

Install pipe and fittings in accordance with paragraph entitled "General Requirements for Installation of Pipelines" of this section and with the requirements of ASTM D 2321 for laying and joining pipe and fittings. Make joints with the gaskets specified for joints with this piping and assemble in accordance with the requirements of ASTM D 2321for assembly of joints. Make joints to other pipe materials in accordance with the recommendations of the plastic pipe manufacturer.

3.1.2.3 Installation of PVC Plastic Piping for Service Laterals and Cleanouts

Installation shall comply with the manufacturer's recommended instructions. Solvent cement joints shall be made in a two-step process with primer manufactured for thermoplastic piping systems and solvent cement conforming to ASTM D-2564.

3.1.2.4 Installation of Ductile Iron Pressure Pipe

Unless otherwise specified, install pipe and fittings in accordance with paragraph entitled "General Requirements for Installation of Pipelines" and with the requirements of AWWA C600 for pipe installation, joint assembly, valve-and-fitting installation, and thrust restraint.

A. Push-On Joints: Make push-on joints with the gaskets and lubricant specified for this type joint; assemble in accordance with the applicable requirements of AWWA C900 for joint assembly. Clean gasket and spigot and inside of bell thoroughly to remove all dirt and other

foreign matter. Insert gasket furnished by the pipe manufacturer into the gasket seat in the bell. Gasket shall be properly seated in the grooves provided in the pipe bell. Using a non-toxic vegetable soap, apply a film by hand to the inside surface of the gasket that comes into contact with the entering pipe and to the first 1" of the spigot end of the entering pipe. Use only lubricant specified by the pipe manufacturer. Align entering pipe with the bell to which it is to be joined. Enter the spigot end into the bell until it just makes contact with the gasket. Apply sufficient pressure to force the spigot end past the gasket up to solid contact with the bell. When it is necessary to field cut pipe with rubber gaskets, chamfer the cut end 1/8 inch x 30 degrees before inserting into a rubber gasket bell.

B. Mechanical Joints: Make mechanical joints with the gaskets, glands, bolts, and nuts specified for this type joint; assemble in accordance with the applicable requirements of AWWA C900 for joint assembly and the recommendations of Appendix A to AWWA C111/A21.11. Clean last 8" outside the spigot, and the inside of the bell of mechanical joint pipe or fitting to remove oil, grit, tar (other than standard coating) and other foreign matter from the joint and then paint area clean with an approved soap solution. The ductile iron gland shall then be slipped on the spigot end of the pipe with the extension of the gland toward the socket or bell end. The rubber gasket shall be painted with the soap solution and placed on the spigot end with thick edge toward the gland. Push entire section of pipe forward to seat spigot end in the bell. Press gasket into place within the bell, being careful to have the gasket evenly located around the entire joint. Move ductile iron gland along the pipe into position for bolting, insert all bolts, and screw nuts up tightly with fingers. Tighten all nuts with a suitable (preferably torque-limiting) wrench. Tighten nuts that are spaced 180 degrees apart alternately in order to produce equal pressure on all parts of the gland.

C. Flanged Joints: Make flanged joints with the gaskets, bolts, and nuts specified for this type joint. Make flanged joints up tight; avoid undue strain on flanges, fittings, valves, and other accessories. Align bolt holes for each flanged joint. Use full size bolts for the boltholes; use of undersized bolts to make up for misalignment of boltholes or for any other purpose will not be permitted. Do not allow adjoining flange faces to be out of parallel to such degree that the flanged joint cannot be made watertight without overstraining the flange. When flanged pipe or fitting has dimensions that do not allow the making of a proper-flanged joint as specified, replace it by one of proper dimensions. Use setscrewed flanges to make flanged joints where conditions prevent the use of full-length flanged pipe and assemble in accordance with the recommendations of the setscrewed flange manufacturer.

D. Sleeved Joints: Assemble joints made with sleeve-type mechanical couplings in accordance with the recommendations of the coupling manufacturer.

E. Fittings: Fittings shall be installed where and as shown on the plans or as directed by Franklin County. All bends (1/16 to 1/4), y-branches, plugs and all other fittings requiring such shall be sufficiently backed, blocked, or braced to preclude the possibility of their blowing off the main.

3.1.2.5 Installation of PVC Plastic Pressure Pipe

Unless otherwise specified, install pipe and fittings in accordance with paragraph entitled "General Requirements for Installation of Pipelines" of this section; with the requirements of UBPPA UNI-

B-3 for laying of pipe, joining PVC pipe to fittings and accessories, and setting of valves, and fittings; and with the recommendations for pipe joint assembly and appurtenance installation in AWWA M23, Chapter 7, "Installation".

A. Push-On Joints: Make push-on joints with the elastomeric gaskets specified for this type joint, using either elastomeric-gasket bell-end pipe or elastomeric-gasket couplings. For pipe-to-pipe push-on joint connections, use only pipe with push-on joint ends having factory-made bevel; for push-on joint connections to fittings, cut spigot end of pipe off square and re-bevel pipe and to a bevel approximately the same as that on ductile-iron pipe used for the same type of joint. Use an approved lubricant recommended by the manufacturer for push-on joints. Assemble push-on joints for pipe-to-pipe joint connecting in accordance with the requirements of UBPPA UNI-B-3 for laying the pipe and the recommendations in AWWA M23, Chapter 7, "Installation", for pipe joint assembly. Assemble push-on joints for connection to fittings in accordance with the requirements of UBPPA UNI-B-3 for joining PVC pipe to fittings and accessories and with the applicable requirements of AWWA C900 for joint assembly. Make compression-type joints/mechanical-joints with the gaskets, glands, bolts, nuts, and internal stiffeners specified for this type joint and assemble in accordance with the requirements of UBPPA UNI-B-3 for joining PVC pipe to fittings and accessories, with the applicable requirements of AWWA C600 for joint assembly, and with the recommendations of Appendix A to AWWA C111/A21.11. Cut off spigot end of pipe for compression-type joint/mechanical-joint connections and do not re-bevel.

3.1.2.6 Pipe Anchorage for Ductile Iron and PVC Pressure Pipe

Provide concrete thrust blocks (reaction backing) for pipe anchorage. Thrust blocks shall be in accordance with the requirements of AWWA C600 for thrust restraint. Use concrete, ASTM C 94, having a minimum compressive strength of 2,500 psi at 28 days; or use concrete of a mix not leaner than one part cement, 2 1/2 parts sand, and 5 parts gravel, having the same minimum compressive strength. Blocking shall be formed and placed in such a manner that the pressure to be exerted at the point of blocking shall be transferred to firm, undisturbed earth at a maximum load of 2,000 lbs, per square foot. The Contractor shall insure that blocking at all tees, bends, plugs, etc., shall be sufficient to contain all pressure exerted by the pipe up to 200 psi hydraulic pressure within the pipe, e.g., pressure at plug = 200 x (area of pipe in inches). Blocking shall be constructed as shown on the detail sheet contained in the project plans. The Contractor shall also be responsible for any damage or repairs caused by blowouts of any insufficiently blocked pipe.

3.1.2.7 Installation of Gate Valves

Install gate valves, AWWA C500 and UL 262, in accordance with the requirements of AWWA C600 for valve-and-fitting installation and with the recommendations of the Appendix ("Installation, Operation, and Maintenance of Gate Valves") to AWWA C509. Make and assemble joints to gate valves and check valves as specified for making and assembling the same type joints between pipe and fittings. Valves shall be set and anchored with steel bars and concrete as shown on the detail sheet contained in the project detailed drawings. All valves set by the Contractor shall include a cast iron or ductile iron valve box set to grade encircled and protected by a precast concrete donut.

3.1.3 Manhole Construction

Construct base slab of cast-in-place concrete or use precast concrete base sections. Make inverts in cast-in-place concrete and precast concrete bases with a smooth-surfaced semi-circular bottom conforming to the inside contour of the adjacent sewer sections. For changes in direction of the sewer and entering branches into the manhole, make a circular curve in the manhole invert of as large a radius as manhole size will permit. For cast-in-place concrete construction, either pour bottom slabs and walls integrally or key and bond walls to bottom slab. No parging will be permitted on interior manhole walls. For precast concrete construction, make joints between manhole sections with the gaskets specified for this purpose; install in the manner specified for installing joints in concrete piping. Parging will not be required for precast concrete manholes. Cast-in-place concrete work shall be in accordance with the requirements specified under paragraph entitled "Concrete Work" of this section. Make joints between concrete manholes and pipes entering manholes with the resilient connectors specified for this purpose; install in accordance with the recommendations of the connector manufacturer. Where a new manhole is constructed on an existing line, remove existing pipe as necessary to construct the manhole. Cut existing pipe so that pipe ends are approximately flush with the interior face of manhole wall, but not protruding into the manhole. Use resilient connectors as previously specified for pipe connectors to concrete manholes.

3.1.4 Miscellaneous Construction and Installation

3.1.4.1 Metal Work

A. Workmanship and finish: Perform metal work so that workmanship and finish will be equal to the best practice in modern structural shops and foundries. Form iron to shape and size with sharp lines and angles. Do shearing and punching so that clean true lines and surfaces are produced. Make castings sound and free from warp, cold shuts, and blowholes that may impair their strength or appearance. Give exposed surfaces a smooth finish with sharp well defined lines and arises. Provide necessary rabbets, lugs, and brackets wherever necessary for fitting and support.

B. Field painting: After installation, clean cast-iron frames, covers, gratings, and steps not buried in concrete to bare metal of mortar, rust, grease, dirt, and other deleterious materials and apply a coat of bituminous paint. Do not paint surfaces subject to abrasion.

3.2 FIELD QUALITY CONTROL

3.2.1 Field Tests and Inspections

Franklin County will conduct field inspections and witness field tests specified in this section. The Contractor shall perform field tests and provide labor, equipment, and incidentals required for testing and be able to produce evidence, when required, that each item of work has been constructed in accordance with the drawings and specifications.

3.2.2 Tests for Nonpressure Lines

Check each straight run of pipeline for gross deficiencies by holding a light in a manhole; it shall show a practically full circle of light through the pipeline when viewed from the adjoining end of

line. Any obstructions revealed during visual inspection of the line shall be removed by flushing with water at a minimum velocity of 2.5 feet per second until the line is clean. When pressure piping is used in a nonpressure line for nonpressure use, test this piping as specified for nonpressure pipe.

3.2.2.1 Leakage Tests

Test lines for leakage by performing either infiltration / exfiltration tests or low-pressure air tests. Leakage (exfiltration or infiltration) shall not exceed 100 gallons per inch pipe diameter, per mile per day for any section of new sewer main.

A. Infiltration / Exfiltration Tests: Each leg of sewer shall be tested by plugging the high side opening of both the upper and lower manholes. The pipe will then be filled with water with approximately six feet of head above the crown of the pipe maintained in the upper manhole. Leakage will be determined by measured additions of water required to maintain the specified head. If ground water is present to a point at least four feet above the crown of the sewer, the leakage test may be made by measuring the amount of infiltration.

B. Low-pressure Air tests: Testing of gravity sewer lines shall be performed according to the manufacturer's recommended procedures for "Air Testing". The duration allowed for a prescribed low-pressure air exfiltration pressure drop between two consecutive manholes shall not be less than that shown in the table below or as specified by the manufacturer. If conflicting information exists, the more stringent of the two shall take precedence. The allowable pressure drop shall not exceed 0.5 psi from 3.5 psi to 5.0 psi in excess of ground water pressure above the top of the sewer. During air testing, manholes shall be plugged with inflatable stoppers to plug all pipe entrances being tested. Lines shall be tested completely including service connections.

<u>Minimum Duration for Air Test Pressure Drop</u>

Pipe Size (Inches)	Time (Minutes)
4	2.5
6	4.0
8	5.0
10	6.5
12	7.5
15	9.5

3.2.2.2 Deflection Testing

Deflection Testing: This test will be required on all PVC composite pipes and shall be conducted after the final backfill has been in place a minimum of 30 days to permit stabilization of the soil-pipe system. In lieu of the waiting period, the Contractor may submit documentation from an approved soil-testing firm certifying the backfill has been compacted to at least 95% maximum density. The test shall be performed using a nine-prong mandrel pulled through the pipe. The maximum allowable deflection will be five percent. Mandrel size will be in accordance with the following table:

Main Size	Mandrel Dimensions
8"	7.40"
10"	9.31"
12"	11.22"
15"	14.09"

3.2.3 Tests for Manholes

Franklin County shall require that a portion or all of the sanitary sewer manholes installed in this project shall be vacuum tested for infiltration. Each manhole shall be tested after assembly, preferably prior to backfilling. All lift holes and pipe entrances shall be plugged and braced as necessary. A vacuum of 10-inches mercury shall be drawn and the vacuum pump shut off. With the valves closed, the time shall be measured for which it takes the vacuum to drop 9-inches of mercury. The manhole shall be approved as passing the test if the time is greater than the values shown below:

Manhole Depth	48"	60"	72"
Less than 10'	60 sec.	75 sec.	90 sec.
10' – 15'	75 sec.	90 sec.	105 sec.
15' – 25'	90 sec.	105 sec.	120 sec.

If the manhole fails the initial test, necessary repairs shall be made with an approved non-shrink grout. Retesting shall continue until the manhole satisfactorily passes the test. All tests shall be performed in the presence of Franklin County's Inspector. The Contractor will furnish all personnel, facilities, and equipment necessary to conduct the testing.

3.2.4 Tests for Pressure Mains

Hydrostatic pressure and leakage testing shall conform to ANSI/AWWA C600-93 or latest revision for ductile iron water main and ANSI/AWWA C605-94 or latest revision for polyvinyl chloride pipe. Pressure testing shall be performed on all pipe, valves and fittings. The test shall be conducted on line segments from shut valve to shut valve in segments not exceeding 5,000 linear feet. The Contractor shall provide a suitable pump for applying pressure and an accurate gauge for measuring the pressure and an Engineer approved method of determining volume of water used. All newly laid pipe and any valved sections thereof shall be subject to a hydrostatic pressure of at least 1.5 times the working pressure at the point of testing or 200 psi (whichever is greater). At the same time the test pressure shall not be less than 1.25 times the working pressure at the highest point along the test section. The hydrostatic test shall be of at least two-hour duration. Removal of air shall be performed to the satisfaction of Franklin County through use of the air release valve assemblies (automatic and manual). If determined necessary by Franklin County, the Contractor shall install additional air taps to be abandoned after all air removal at no additional cost to Franklin County. Leakage shall be defined as the quantity of water that must be supplied into the newly laid pipe or any valved section thereof to maintain pressure within 5 psi (35 MPa or 0.35 bar) of the specified test pressure after the pipe has been filled with water and the air has been expelled. Leakage shall not be measured by a drop in pressure in a test section over a period of time. No installation will be accepted if the leakage is greater than that determined by the following formulas:

When testing Ductile Iron Pipe:

$$L = \frac{SD\sqrt{P}}{133{,}200}$$

Where:

L = allowable leakage, in gallons per hour
S = length of pipe tested, in feet
D = nominal diameter of the pipe, in inches
P = average test pressure during the leakage test, in pounds per square inch (gauge)

When testing Polyvinyl Chloride Pipe:

$$L = \frac{ND\sqrt{P}}{7{,}400}$$

Where:

L = allowable leakage, in gallons per hour
N = number of joints is length of pipeline tested
D = nominal diameter of the pipe, in inches
P = average test pressure during the leakage test, in pounds per square inch (gauge)

When testing against closed metal-seated valves, an additional leakage per closed valve of 0.0078 gph/in. (0.0012 L/h/m) of nominal valve size shall be allowed. Acceptance shall be determined on the basis of allowable leakage. If any test of laid pipe discloses leakage greater than that specified above, the Contractor shall, at his own expense, locate and make approved repairs as necessary until the leakage is within the specified allowance. All visible leaks are to be repaired, regardless of the amount of leakage.

3.2.4.1 Hydrostatic Leakage Testing for HDPE Pipe

3.2.4.1 Hydrostatic Testing for HDPE Pipe

Leakage testing for HDPE pipe shall be accomplished hydrostatically. The testing procedure shall consist of filling, an initial expansion phase, a test phase, and depressurization. The test pressure shall be 1.5 times the system design operating pressure as measured at the lowest elevation in the test section. Fill the test section completely. Begin the initial expansion phase by gradually pressurizing the test section to the test pressure. Maintain the test pressure for two (2) hours by adding test water as required to maintain pressure, as the pipe will expand slightly during this phase. It is not required to monitor the amount of water added. Immediately following the initial expansion phase, monitor the amount of make-up water required to maintain test pressure for two (2) hours. No leakage is indicated when the amount of make-up water needed to maintain test pressure does not exceed the amount listed below.

Pipe Size (Inches)	Make-Up Water Allowance per 100 ft. of Pipe (Gallons)
12"	2.3 gallons

At the conclusion of the test, carefully depressurize the test section by the controlled release of test water.

PART 4 PAYMENT PROCEDURES

4.1 GENERAL REQUIREMENTS

Payment for work in this section shall be at the Contractor's unit prices for estimated qualities of sanitary sewer gravity main, sanitary sewer force main and appurtenances, sanitary sewer structures, and service laterals of the dimensions and types called for herein and on the plan drawings. Payment shall be full compensation for furnishing, hauling and placing all materials, equipment, tools and labor necessary for excavation and backfill, disposal of surplus materials, removal of existing structures, abandonment of existing structures, by-pass pumping, testing, installation of tracer wire (for PVC pressure mains) and all other incidentals necessary to complete the work.

4.2 MEASUREMENT AND PAYMENT

4.2.1 Sanitary Sewers

4.2.1.1 Sanitary Sewer Gravity Main and Force Mains

Measurement of installed sanitary sewer mains and force mains as shown in the drawing profile views shall begin at the end of the pipe and proceed through to the end of the installed line including distances through fittings, intermediate manholes, cleanout assemblies, etc.; complete, in-place and accepted. The measured quantity shall be paid for at the Contractor's unit prices for the actual linear footage of sanitary sewer main and force main installed with respect to diameter, depth of installation and particular material and class of pipe.

4.2.1.2 Fittings

Force main fittings and shall be measured according to unit complete in place and accepted. Couplings are considered and incidental part of the water main construction and will not be paid for directly but shall be included in the price per foot of water main installation. Concrete for thrust blocking shall be considered incidental to fitting placement and included in the unit cost of the fitting. Payment shall be made at the Contractor's unit price with respect to the particular dimensions and configuration of the mechanical joint fittings as furnished in the Schedule of Bid Items.

4.2.1.3 Valves

All valves including valves boxes and marker posts and air valves including concrete manhole set to finished grade shall be measured according to unit, complete in place and accepted. Payment shall be made at the Contractor's unit prices with respect to valves size and type as furnished in the Schedule of Bid Items.

4.2.2 Manholes

Manholes shall be measured by individual unit, complete in-place and accepted. Payment shall be made at the Contractor's unit prices with respect to diameter and varying depth classifications. The depth shall be the measured distance from the invert to the top of the rim at finished grade. Separate pay items for special drop manholes are furnished in the Schedule of Bid Items.

4.2.3 4" Sanitary Service Laterals

4" service laterals shall be measured by individual unit, complete in-place and accepted. The average length shall be 25'. Service lateral shall terminate with clean out assembly and above grade stub out as indicated. Payment shall be made at the Contractor's unit prices with respect to the type of sewer main piping the connection is made. For connections to Polyvinyl Chloride (PVC) sewer mains the unit price shall include costs for approved tapping saddles or an in-place wye or tee-wye fittings. For connections to ductile iron pipe sewer mains, the unit price shall include costs for installation of approved compression type or saddle connection.

--END OF SECTION--

DETAILED SPECIFICATIONS

SECTION 3: EARTHWORK AND BORINGS FOR UTILITIES

PART 1 GENERAL

1.1 REFERENCES

The publications listed below form a part of this specification to the extent referenced. The publications are referred to in the text by the basic designation only and Latest Revisions shall be applicable to all references.

AMERICAN SOCIETY FOR TESTING AND MATERIALS (ASTM)

ASTM A139	Standard Specification for Electric-Fusion (Arc)-Welded Steel Pipe
ASTM D698	Laboratory Compaction Characteristics of Soil Using Standard Effort (12,400 ft-lbf/ft (600 kN-m/m))
ASTM D1140	Amount of Material in Soils Finer Than the No. 200 (75-Micrometer) Sieve
ASTM D1557	Laboratory Compaction Characteristics of Soil Using Modified Effort (56,000 ft-lbf/ft (2,700 kN-m/m))
ASTM D2487	Standard Classification of Soils for Engineering Purposes (Unified Soil Classification System)
ASTM D4253	Maximum Index Density of Soils Using a Vibratory Table
ASTM D4254	Minimum Index Density and Unit Weight of Soils and Calculation of Relative Density
ASTM D4318	Liquid Limit, Plastic Limit, and Plasticity Index of Soils
ASTM F1962	Standard Guide for Use of Maxi-Horizontal Directional Drilling for Placement of Polyethylene Pipe or Conduit Under Obstacles, Including River Crossings

CORPS OF ENGINEERS (COE)

COE EM-385-1-1	Safety and Health Requirements Manual

1.2 DESIGN REQUIREMENTS

1.2.1 Trenching

The trench shall be dug to the required alignment and depth as shown on the plans or directed by Franklin County, and only so far in advance of the pipe laying as Franklin County shall permit. The width of the trench shall be kept at a minimum. The depth of the trench shall generally be sufficient to allow a minimum of four feet of cover over the top of the pipe. The bottom of the trench shall be shaped by hand and shall support the pipe for the entire length. It shall be the responsibility of the Contractor to provide adequate bearing for all pipe lines laid in uncertain soil conditions. If flooding, rain or other causes should soften the trench bottom, the unsuitable material shall be removed and replaced with suitable material properly shaped and tamped to grade.

1.2.2 Horizontal Borings for Steel Casing Installation

Procedures for boring shall be in accordance with the best-accepted methods of the construction and as shown on the plans and described in these specifications. Steel casing pipes installed under highways and railroads shall be bored as shown on the detail drawings. Casings will be installed of the type, size, and thickness as specified herein or on the detail drawings.

1.2.2.1 Under Highways

Contractor shall be responsible for notifying the Department of Transportation at least five days prior to any contemplated work and for securing any required permits for performing the work. All work shall be accomplished under the supervision of Franklin County and the District Engineer of the Department of Transportation or his authorized representative.

1.2.2.2 Under Railroads

All work on railroad rights of way shall be done under the supervision of the Chief Engineer of the railroad, or his authorized representative, who shall be notified at least 15 days before construction is begun. In addition, this work shall only be done in the presence of the authorized representative of the Chief Engineer, and no methods shall be used that, in the opinion of the representative, could be hazardous to the railway.

1.2.3 Directional Borings Utilizing HDPE Pipe

Directional boring is a method of trenchless construction using a surface launched steerable drilling tool controlled from a mobile drilling frame, and includes a field power unit, mud mixing system and mobile spoils extraction system. The drilling frame is sited and aligned to bore a pilot borehole that conforms to the planned installation of the main. The drilling frame is set back from an access pit that has been dug (typically at the location of a proposed manhole or other appurtenance) and a high-pressure fluidjet toolhead that uses a mixture of bentonite clay and water is launched. Pits are normally dug at the start point and endpoint of the proposed pipe installation and are used to align the toolhead, attach other equipment, and to collect and remove excess spoils. Using an electronic guidance system, the toolhead is guided through the soil to create a pilot borehole. Upon reaching the endpoint joint, the toolhead is removed and a reamer with the product pipe attached is joined to

the drill string and pulled back through the borehole. In large diameter installations, pre-reaming of the borehole will usually be done prior to attaching the product pipe for the final pullback. A vacuum spoils extraction system removes any excess spoils generated during the installation. The connections, manholes or other appurtenances are then completed at both the start point and endpoint locations and the surface restored to its original condition.

1.2.3.1 Site Conditions for Directional Borings

Drilling operations must not interfere with, interrupt or endanger surface and activity upon the surface. Contractor must comply with all applicable jurisdictional codes and OSHA requirements.

When rock stratum, boulders, underground obstructions, or other soil conditions that impede the progress of drilling operations are encountered, the Contractor and Engineer shall review the situation and jointly determine the feasibility of continuing drilling operations.

1.3 EARTHWORK DEFINITIONS

1.3.1 Backfill

Material used in refilling a cut, trench or other excavation.

1.3.2 Cohesive Materials

Soils classified by ASTM D2487 as GC, SC, ML, CL, MH, and CH. Materials classified as GM and SM will be identified as cohesive only when fines have a plasticity index greater than zero.

1.3.3 Cohesionless Materials

Soils classified by ASTM D2487 as GW, GP, SW, and SP. Materials classified as GM and SM will be identified as cohesionless only when the fines have a plasticity index of zero.

1.3.4 Compaction

The process of mechanically stabilizing a material by increasing its density at a controlled moisture condition. "Degree of Compaction" is expressed as a percentage of the maximum density obtained by the test procedure described in ASTM D698 or ASTM D1557 for general soil types or ASTM D4253 or ASTM D4254 (Relative Density) for isolated cohesionless materials, abbreviated in this specification as "95 percent ASTM D698 maximum density."

1.3.5 Granular Pipe Bedding

A dense, well-graded aggregate mixture of sand, gravel, or crushed stone (mixed individually, in combination with each other, or with suitable binder soil) placed on a subgrade to provide a suitable foundation for pipe (NCDOT #57 or #67). Granular bedding material may also consist of poorly graded sands or gravels where fast draining soil characteristics are desired.

1.3.6 Hard Material

Weathered rock, dense consolidated deposits, or conglomerate materials (excluding man made materials such as concrete) which are not included in the definition of "rock" but which usually require the use of heavy excavation equipment, ripper teeth, or jack hammers for removal.

1.3.7 In-Situ Soil

Existing in place soil.

1.3.8 Lift

A layer (or course) of soil placed on top of subgrade or a previously prepared or placed soil in a fill or backfill.

1.3.9 Porous Fill

A granular soil material having a large void ratio when placed and compacted, allowing a free flow of fluid to or from the surrounding soil, with no more than 5 percent of the material passing the No. 100 Sieve.

1.3.10 Refill

Material placed in excavation to correct overcut in depth.

1.3.11 Rock

Solid homogeneous interlocking crystalline material with firmly cemented, laminated, or foliated masses or conglomerate deposits, neither of which can be removed without systematic drilling and blasting, drilling and the use of expansion jacks or feather wedges, or the use of backhoe-mounted pneumatic hole punchers or rock breakers; also large boulders, buried masonry, or concrete other than pavement exceeding 1/2 cubic yard in volume. Removal of "hard material" will not be considered rock excavation because of intermittent drilling and blasting that is performed merely to increase production.

1.3.12 Satisfactory Backfill Material

Non-plastic soils as defined by ASTM D2487 such as SW, SM and SC free of rock or gravel larger than 3 inches in any dimension, debris, organic matter, waste, frozen material, muck, roots, vegetation, and other deleterious matter.

1.3.13 Select Backfill (Borrow)

Satisfactory material obtained from borrows areas or commercial sources used as backfill.

1.3.14 Topsoil

In natural or undisturbed soil formations, the fine-grained, weathered material on the surface or directly below any loose or partially decomposed organic matter. Topsoil may be a dark-colored, fine, silty, or sandy material with a high content of well-decomposed organic matter, often containing traces of the parent rock material. Gradation and material requirements specified herein apply to all topsoil references in this contract. The material shall be representative of productive soils in the vicinity.

1.3.15 Unyielding Material

Rock rib, ridge, rock protrusion, or soil with cobbles in the trench bottom requiring a covering of finer grain material or special bedding to avoid bridging in the pipe or conduit.

1.3.16 Unsatisfactory Backfill Material

In-Situ soil or other material, which can be identified as having insufficient strength characteristics or stability to carry intended loads in the trench without excessive consolidation or loss of stability. Also backfill material, which contains refuse, frozen material, large rocks, debris, soluble particles, and other material, which could damage the pipe or cause the backfill not to compact. Materials classified as PT, OH, or OL by ASTM D 2487 are unsatisfactory.

1.3.17 Unstable Material

Material in the trench bottom, which lacks firmness to maintain alignment and prevent joints from separating in the pipe, conduit, or appurtenance structure during backfilling. This may be material otherwise identified as satisfactory which has been disturbed or saturated.

1.4 SUBMITTALS

Submit six (6) copies of the following to Franklin County for approval before beginning construction.

1.4.1 Product Data

A. Steel Casings

B. Carrier Pipe Support and Spacer

C. Casing End Seals

D. Bentonite drilling mud products (for Directional Boring) information (MSDS); special precautions necessary; method of mixing and application; and method of removing spoils.

E. HDPE pipe for Directional Boring shall conform to the requirements in Section 1 & 2 "WATER DISTRIBUTION" & "SANITARY SEWERAGE".

1.4.2 Statements

1.4.2.1 Shoring and Sheeting Plan

Describe materials of shoring system to be used. Indicate whether or not components will remain after filling or backfilling. Provide plans, sketches, or details along with calculations by a professional engineer registered in any jurisdiction. Indicate sequence and method of installation and removal.

1.4.2.2 Dewatering Plan

Describe methods for removing collected water from open trenches and diverting surface water or piped flow away from work area. Describe the basic components of the dewatering system proposed for use and its planned method of operation. Dewatering plan, as a minimum, shall address those requirements outlined in paragraph entitled "Drainage and Dewatering."

1.4.3 Qualifications

1.4.3.1 Directional Boring Contractors

Directional boring Contractors will have actively engaged in the installation of pipe using directional boring techniques for a minimum of three years. Field supervisory personnel employed by the Directional Boring Contractor will have at least three years experience in the performance of the work and tasks. Submit documentation indicating experience. Information must include, but not be limited to, date and duration of work, location, pipe information (i.e., length, diameter, depth of installation, pipe material, etc.), project owner information, (i.e., name, address, telephone number, contact person), and the contents handled by the pipeline (water, wastewater, etc.). Submit a list of field supervisory personnel and their experience with directional boring operations. At least one of the field supervisors listed must be at the site and be responsible for all work at all times when directional boring operations are in progress. Directional boring operations will not proceed until the resume(s) of the Contractor's field supervisory personnel have been received and reviewed by Franklin County.

1.4.4 Drawings

1.4.4.1 Directional Boring

Working drawings and written procedure describing in detail the proposed method of installation. This will include, but not be limited to, size, capacity and setup requirements of equipment; location and siting of drilling and receiving pits; dewatering if applicable; method of fusion and type of equipment for joining pipe; type of cutting tool head; and method of monitoring and controlling line and depth. If the Contractor determines that modifications to the method and equipment as stated in the submittal is necessary during construction, the contractor will submit a plan describing such modifications, including the reasons for the modification.

1.4.5 Test Reports

A. Maximum Density and Compaction Tests

1.4.5.1 Compaction Tests

Submit within 5 days of test date.

1.5 REGULATORY REQUIREMENTS

Materials and workmanship specified herein with reference to NC DOT State Standard shall be in accordance with the referenced articles, sections, and paragraphs of the standard except that contractual and payment provisions do not apply.

1.6 DELIVERY, STORAGE, AND HANDLING

Deliver and store materials in a manner to prevent contamination, segregation, freezing, and other damage. Store synthetic fiber filter fabric to prevent exposure to direct sunlight.

1.7 CRITERIA FOR BIDDING

Base bids on the following criteria:

A. Surface elevations are as indicated.

B. No pipes or other man-made obstructions, except those indicated, will be encountered.

C. No prior subsurface investigation has been performed for this project. However, in preparing the bid, the Contractor shall assume that "Rock" or "Hard Material" as defined in the paragraph entitled "Definitions", will likely be encountered.

D. The Contractor should be aware of the possibility of encountering material not suitable for foundation or backfill material in the excavation for this project, defined as either "Unsatisfactory Material" or "Unstable Material" in the paragraph entitled "Definitions". Compensation for removal and replacement of an estimated volume of material not suitable for foundation or backfill is detailed in Part 4 of this specification.

1.7.1 Rock Excavation

Rock excavation consists of the blasting and excavation and disposal of rock material in cut areas. Rock excavation shall be labeled as material that cannot be removed with normal construction equipment such as pan scrapers or bulldozers with “rippers”, and requires the construction practice of blasting.

A. Classification: Rock shall be defined as sandstone, limestone, flint, granite, quartzite, slate, or similar material in masses more than ½ cubic yard in volume or in ledges 4 inches or more in thickness that cannot be excavated with a 25 metric ton hydraulic excavator equipped with rock teeth on a 24-inch wide bucket. Should rock be encountered in two or more ledges, each ledge being not less than 3-inches thick and with interlaying strata of earth, clay or gravel not more than 12-inches thick in each stratum, the entire volume between the top ledge and the bottom of the bottom ledge will be classified as rock.

B. Construction Requirements: Blasting: The use of explosives shall be performed in strict accordance with all Federal, State, County and local regulation and only after the approval of Franklin County. The Contractor shall be responsible for all damage caused by blasting operations. Suitable methods shall bee employed to confine all materials that may be displaced by blasting; i.e., prevent projectiles. When rock is encountered, all lines and grades will be held in accordance with the plans or adjusted only after approval of Franklin County. Rock shall be excavated within the same limits as that of earth except that the trench shall be made 6-inches deeper than if no rock were encountered. The lower 6-inches shall be filled with #67 stone or other equivalent material approved by Franklin County and compacted prior to installing pipe. When rock is encountered within the limits of construction, the Contractor shall notify Franklin County's representative prior to any removal. Upon Franklin County's authorization, the Contractor shall remove the rock. The Contractor shall not be paid for rock removed without prior approval from Franklin County.

1.8 PROTECTION

1.8.1 Dewatering Plan

Base site surface and subsurface conditions, available soil and hydrological data.

1.8.2 Utilities

Movement of construction machinery and equipment over pipes and utilities during construction shall be at the Contractor's risk. For work immediately adjacent to or for excavations exposing a utility or other buried obstruction, excavate by hand. Start hand excavation on each side of the indicated obstruction and continue until the obstruction is uncovered or until clearance for the new grade is assured. Support uncovered lines or other existing work affected by the contract excavation until Franklin County grants approval for backfill. Report damage to utility lines or subsurface construction immediately to Franklin County.

PART 2 PRODUCTS

2.1 SOIL MATERIALS

Provide soil materials as specified below free of debris, roots, wood, scrap material, vegetable matter, refuse, soft unsound particles, ice, or other deleterious and objectionable materials.

2.1.1 Backfill

Bring trenches to grade as indicated on the drawings using material excavated on the site of this project unless deemed unfit for use as backfill by Franklin County. Replace unsuitable material with suitable material as defined in Paragraph 1.3.12 "Satisfactory Backfill Material". This material will be considered unclassified and no testing other than for compaction will be required before use as backfill except that the liquid limit of the material cannot exceed 35 percent when tested in accordance with ASTM D4318, the plasticity index cannot exceed 12 percent when tested in

accordance with ASTM D4318, and not more than 35 percent by weight can be finer that the No. 200 sieve when tested in accordance with ASTM D1140.

2.1.2 Pipe Bedding

2.1.2.1 Ductile Iron and PVC Water Mains and Force Mains

Pipe bedding shall be the same backfill using material excavated on site unless deemed unfit for use as backfill by Franklin County. Replace unsuitable material with suitable material as defined in Paragraph 1.3.12 "Satisfactory Backfill Material". Material surrounding pipe shall have ½" maximum particle size.

2.1.2.2 Ductile Iron and PVC Gravity Sewer Mains

Pipe bedding shall consist of a 4" NCDOT #57 or #67 stone gravel base with stone continuing as backfill to a minimum of 6" over top of the pipe.

2.1.3 Gravel

Clean, coarsely graded natural gravel, crushed stone or a combination thereof identified as NCDOT #57 or NCDOT #67.

2.1.4 Topsoil Material

Free of subsoil, stumps, rocks larger than 3/4 inch in diameter (with maximum 3 percent retained on 1/4 inch sieve), brush, weeds, toxic substances, and other material or substance detrimental to plant growth. Topsoil shall be a natural, friable soil representative of productive soils in the vicinity.

2.1.5 Borrow (Select Backfill Material)

Where excavated material is deemed unfit for use backfill, provide select backfill material meeting the definition described in Paragraph 1.2.12 "Satisfactory Backfill Material". Obtain borrow materials in excess of those unfit from excavations specified herein from borrow areas specified by the Contractor and approved by Franklin County.

2.2 CASING PIPE FOR HIGHWAY AND RAILROAD HORIZONTAL BORES

Pipe material shall be new smooth wall carbon steel pipe that conforms to ASTM A139, Grade B without hydrostatic tests. Steel casing shall have a minimum yield strength of 35,000 psi. Steel pipe joints shall be welded and be in at least 18' lengths. All steel pipe shall be square cut with beveled ends for welding. Steel casing shall have a roundness such that the difference between the major and minor outside diameters shall not exceed 1% of the nominal outside diameter or 0.25", whichever is less. Steel casing shall have a outside circumference that is within 1% of the nominal circumference or 0.50", whichever is less. Steel casing pipe shall have a minimum allowable straightness deviation in any 10 length of 1\8 inch. The exterior of the casing pipe shall be coated with coal tar epoxy or bituminous asphalt with a minimum coating thickness of 2 mils.

2.2.1 Casing Dimensions

The inside diameter of the casing pipe shall not be less than 2 inches greater than the largest outside diameter of the joints and couplings for carrier pipe less than 6" O.D., and 4" greater for carrier pipe 6" and larger. It shall, in all cases, be great enough to easily remove carrier pipe without disturbing the casing pipe. The minimum steel casing size for Ductile Iron "slip joint" carrier pipe shall be as follows:

Nominal D.I. Carrier Pipe Dia. (Inches)	Steel Casing Minimum O.D. (Inches)	Min. Wall Thickness For Highways (Inches)	Min. Wall Thickness For Railroads (Inches)
3	8.625	0.250	0.250
4	10.750	0.250	0.250
6	14.0	0.250	0.250
8	16.0	0.250	0.312
10	18.0	0.250	0.312
12	20.0	0.250	0.375
14	24.0	0.250	0.375
16	26.0	0.312	0.500
18	28.0	0.312	0.500
20	30.0	0.312	0.500
24	34.0	0.500	0.625

2.2.2 Carrier Pipe

Carrier pipe used under highways shall be of an approved material and installed to the satisfaction of the District Engineer of the Department of Transportation. Carrier pipe shall be as indicated on the project drawings and shall meet the requirements specified in Section 1 "WATER DISTRIBUTION" Section 2 "SANITARY SEWERAGE" and unless otherwise noted.

2.2.3 Casing Spacers

Casing spacer bands shall be 14-gauge steel of two-piece construction. Liners shall be minimum 0.90" thick PVC. Risers shall be 10-gauge steel MIG welded to band. Nuts bolts and washers shall be Grade 5. Runners shall be glass reinforced plastic spaced equally around the circumference. Casing spacer ferrous components shall be coated with corrosion resistant enamel paint. **A minimum of two spacers (as shown in detail W-25) shall be installed per full joint of pipe. Additional spiders may be required at the direction of Franklin County Utilities depending construction conditions, size of casing and carrier pipe.**

2.2.4 Casing End Seals

Casing End Seals shall be 1/8" thick synthetic rubber designed to withstand the weight of the backfill material. Stainless steel bands shall be used to attach the seals to the carrier and casing pipes.

2.3 HDPE PIPE FOR DIRECTIONAL BORES

HDPE pipe shall be accordance with requirements specified in Section 1, "WATER DISTRIBUTION" and SECTION 2, "SANITARY SEWERAGE".

2.4 DRILLING FLUID FOR DIRECTIONAL BORES

Drilling fluid will be a mixture of water and bentonite clay. The fluid will be inert.

PART 3 EXECUTION

3.1 PROTECTION

3.1.1 Shoring and Sheeting

Provide shoring trench boxes and sheeting where required, according to subsurface conditions and depth of trench. In addition to Section 25 A and B of COE EM-385-1-1, include provisions in the shoring and sheeting plan that will accomplish the following:

a. Prevent undermining of pavements, foundations and slabs.

b. Prevent slippage or movement in banks or slopes adjacent to the excavation.

c. Allow for the abandonment of shoring and sheeting materials in place in critical areas as the work is completed. In these areas, backfill the excavation to within 3 feet of the finished grade and remove the remaining exposed portion of the shoring before completing the backfill.

3.1.2 Drainage and Dewatering

Plan for and provide the structures, equipment, and construction for the collection and disposal of surface and subsurface water encountered in the course of construction.

3.1.2.1 Drainage

Surface water shall be directed away from excavation and construction sites so as to prevent erosion and undermining of foundations. Diversion ditches, dikes and grading shall be provided and maintained as necessary during construction. Excavated slopes and backfill surfaces shall be protected to prevent erosion and sloughing. Excavation shall be performed so that the site and the area immediately surrounding the site and affecting operations at the site shall be continually and effectively drained.

3.1.2.2 Dewatering

Groundwater flowing toward or into excavations shall be controlled to prevent sloughing of excavation slopes and walls, boils, uplift and heave in the excavation and to eliminate interference with orderly progress of construction. French drains, sumps, ditches or trenches will not be permitted within 3 feet of the foundation of any structure, except with specific written approval, and after specific contractual provisions for restoration of the foundation area have been made. Control

measures shall be taken by the time the excavation reaches the water level in order to maintain the integrity of the in-situ material. While the excavation is open, the water level shall be maintained continuously, at least 3 feet below the working level. Operate the dewatering system until construction work below existing water levels is complete. Measure and record the performance of the dewatering system. Have a back-up pump and system available for immediate use.

3.1.3 Underground Utilities

Location of the existing utilities indicated is approximate. The Contractor shall physically verify the location and elevation of the existing utilities indicated prior to starting construction. The Contractor shall contact the Franklin County Water and Sewer Department regarding location of existing utilities.

3.1.4 Structures and Surfaces

Protect newly backfilled areas and adjacent structures, slopes, or grades from traffic, erosion settlement, or any other damage. Repair and reestablish damaged or eroded grades and slopes and restore surface construction prior to acceptance. Protect existing streams, ditches, and storm drain inlets from water-borne soil by means of as indicated on the contract drawings.

3.1.4.1 Disposal of Excavated Material

Dispose of excavated material so that it will not obstruct the flow of runoff, streams, endanger a partly finished structure, impair the efficiency or appearance of any facilities, or be detrimental to the completed work.

3.2 SURFACE PREPARATION

3.2.1 Stockpiling Topsoil

Strip suitable soil from the site where excavation or grading is indicated and stockpile separately from other excavated material. Material unsuitable for use as topsoil shall be stockpiled and used for backfilling. Locate topsoil so that the material can be used readily for the finished grading. Where sufficient existing topsoil conforming to the material requirements is not available on site, provide borrow materials suitable for use as topsoil. Protect topsoil and keep in segregated piles until needed.

3.2.2 Cutting Pavement, Curbs, and Gutters

Saw cut with neat, parallel, straight lines one foot wider than trench width on each side of trenches and one foot beyond each edge of pits. When the saw cut is within 5 feet of an existing joint, remove pavement to the existing joint.

3.3 GENERAL EXCAVATION AND TRENCHING

Keep excavations free from water while construction is in progress. Notify Franklin County immediately in writing if it becomes necessary to remove rock or hard, unstable, or otherwise unsatisfactory material to a depth greater than indicated. Make trench sides as nearly vertical as

practicable except where sloping of sides is allowed. Sides of trenches shall not be sloped from the bottom of the trench up to the elevation of the top of the pipe. Over excavate soft, weak, or wet excavations. Use bedding material placed in 6-inch maximum layers to refill overdepths to the proper grade. At the Contractor's option, the excavations may be cut to an overdepth of not less than 4 inches and refilled to required grade as specified. Grade bottom of trenches accurately to provide uniform bearing and support for each section of pipe on undisturbed soil, or bedding material as indicated or specified at every point along its entire length except for portions where it is necessary to excavate for bell holes and for making proper joints. Dig bell holes and depressions for joints after trench has been graded. Dimension of bell holes shall be as required for properly making the particular type of joint to ensure that the bell does not bear on the bottom of the excavation. Trench dimensions shall be as indicated.

3.3.1 Shoring and Sheeting

Shore and sheet excavations as described in the plan submitted with various member sizes arranged to prevent injury to persons and damage to structures. Arrange shoring and sheeting to preclude injurious caving during removal. Obtain approval from Franklin County prior to removing shoring, sheeting, or bracing in excavations adjacent to on-grade slabs, foundations, or other structural elements.

3.4 BEDDING

3.4.1 Ductile Iron and PVC Water Main and Force Mains

For water main and sewer force main construction, all Ductile Iron and Polyvinyl Chloride (PVC) pipe shall be installed in Type 3 embedment. The pipe shall be bedded in 4" of loose soil. Backfill shall be lightly consolidated to the top of the pipe. Loose soil is defined as native soil excavated from the trench, free of rocks, foreign materials and frozen earth. Bedding shall be material excavated from the trench unless otherwise directed by Franklin County. Place bedding in 6-inch maximum loose lifts. Provide uniform and continuous support for each section of structure except at bell holes or depressions necessary for making proper joints. Where rock is encountered in the bottom of the trench the pipe shall be bedded in 4" of #67 stone.

3.4.2 Ductile Iron and PVC Gravity Sewer Mains

For gravity sewer main construction, all Ductile Iron and Polyvinyl Chloride (PVC) pipe shall be installed in Type 5 embedment. The pipe shall be placed on a 4" stone gravel base. Stone shall continue as backfill to the top of the pipe.

3.5 BACKFILLING

Construct backfill in two operations (initial and final) as indicated and specified in this section. Place initial backfill in 6-inch maximum loose lifts to one foot above pipe unless otherwise specified. Ensure that initially placed material is tamped firmly under pipe haunches. Bring up evenly on each side and along the full length of the pipe, structure. Ensure that no damage is done to the utility or its protective coating. Place the remainder of the backfill (final backfill) in 12-inch maximum loose lifts unless otherwise specified. Compact each loose lift as specified in the paragraph entitled "General Compaction" before placing the next lift. Do not backfill in freezing weather or where the

material in the trench is already frozen or is muddy, except as authorized. Provide a minimum cover from final grade of 2 feet for sewer mains and storm drains. Where settlements greater than the tolerance allowed herein for grading occur in trenches and pits due to improper compaction, excavate to the depth necessary to rectify the problem, then backfill and compact the excavation as specified herein and restore the surface to the required elevation. Coordinate backfilling with testing of utilities.

3.6 COMPACTION

Use hand-operated, plate-type, vibratory, or other suitable hand tampers in areas not accessible to larger rollers or compactors. Avoid damaging pipes and protective pipe coatings. Compact material in accordance with the following unless otherwise specified. If necessary, alter, change, or modify selected equipment or compaction methods to meet specified compaction requirements.

3.6.1 Compaction of Material in Subcuts or Overexcavations

In soft, weak, or wet soils, tamp refill material to consolidate to density of adjacent material in trench wall. In stable soils, compact to 95 percent of maximum density at optimum water content as determined by the Standard Proctor Test, ASTM D698.

3.6.2 Compaction of Pipe Bedding

Compact to 95 percent of ASTM D698 maximum density.

3.6.3 Compaction of Backfill

Compact initial backfill material surrounding pipes to 95 percent of ASTM D698 maximum density. Under areas to be seeded or sodded, compact succeeding layers of final backfill to 85 percent of ASTM D698 maximum density. For utilities under structures, pavements and road shoulders compact succeeding layers of final backfill as specified under paragraph entitled "Special Earthwork Installation Requirements

3.7 SPECIAL EARTHWORK INSTALLATION REQUIREMENTS

3.7.1 Manholes and Other Appurtenances

Provide at least 12 inches clear from outer surfaces to the embankment or shoring. Remove rock as specified herein. Remove unstable soil that is incapable of supporting the structure to an overdepth of one foot and refill with gravel to the proper elevation. Stabilize soft, weak, or wet excavations as indicated. Refill overdepths with gravel to the required grade and compact as specified.

3.7.2 Compaction for Structures, Pavements and Road Shoulders

Place final backfill in 6-inch maximum loose lifts. If a vibratory roller is used for compaction of final backfill, the lift thickness can be increased to 9 inches. Compact all backfill surrounding pipes, ducts, conduits, and other structures to 95 percent of ASTM D698 maximum density except compact the top 12 inches of subgrade to 98 percent of ASTM D698 maximum density. Backfill to permit the rolling and compacting of the completed excavation with the adjoining material,

providing the specified density necessary to enable paving of the area immediately after backfilling has been completed.

3.8 CASING PIPE INSTALLATION FOR HORIZONTAL BORES

Procedures for casing pipe installation shall be in accordance with the best-accepted methods of the construction and as shown on the plans and specified and detailed in these specifications.

3.8.1 Borings Under Paved Roads and Highways

The minimum depth from the roadway surface to the top of the casing pipe at its closest point shall be three feet. The casing pipe ends shall be sealed to the carrier pipe as described in the paragraph above entitled "Casing End Seals". The casing pipe shall extend a minimum of 5' beyond the edge of pavement on either side unless otherwise noted on the plans or specified herein. Contractors shall be required to provide shoring of boring pits and trenches more than 6 feet deep in accordance with the North Carolina Department of Transportation and Federal Occupational Health and Safety Act.

3.8.2 Borings under Railroads

The depth from the base of the railway rail to the top of the casing at the closest point shall not be less than 5-1/2 feet. Also, there should not be less than 3 feet from the bottom of the side ditches to the top of the casing pipe. The casing pipe ends shall be protected from the entrance of foreign materials. The casing shall extend a minimum of 25 feet either side of the centerline of the railroad track unless otherwise noted on the plans or specified herein. Contractors shall be required to shore all pits used for boring if it is over 6 feet deep.

3.9 DIRECTIONAL BORING FOR HDPE PIPE INSTALLATION

3.9.1 General

This section includes the installation of HDPE pipe by directional boring, including connecting to the existing main. Directional Boring shall conform to ASTM F1962. The Contractor will furnish all labor, components, materials, tools and appurtenances necessary or proper for the performance and completion of the contract. Franklin County shall be notified immediately if any obstruction is encountered that stops the forward progress of drilling operations.

3.9.1 Preparation

Excavate required pits in accordance with the working drawings. The drilling procedures and equipment shall provide protection of workers, particularly against electrical shock. As a minimum, grounding mats, grounded equipment, hot boots, hot gloves, safety glasses and hard hats shall be used by crewmembers. The drilling equipment shall have an audible alarm system capable of detecting electrical current. Removal of trees, landscaping, pavement or concrete shall be performed as specified.

3.9.2 Equipment

The drilling equipment must be capable of placing the pipe within the limits indicated on the contract plans. The drilling equipment shall also be capable of 79,000 pounds of pull back force. Directional boring equipment shall consist of a surface launched steerable drilling tool controlled from a mobile drilling frame, and include a field power unit, mud mixing system and mobile spoils extraction system. The number of access pits shall be kept to a minimum and the equipment must be capable of boring the following lengths in a single bore. The directional boring system will have the capability of boring and installing a continuous run without intermediate pits of a minimum distance for the following pipe diameters:

Product Pipe Size	Minimum Boring Distance
1 – 1 ½ inches	500 feet
2 – 4 inches	450 feet
6 inches	400 feet
8 inches	350 feet
10 – 18 inches	300 feet

The guidance system shall have the capability of measuring vertical (depth) position, horizontal position and roll. The guidance system must meet the following specifications in soft homogenous soils:

A. Accuracy

1. Vertical position:	± 1 inch at	18-96	inches of depth
	± 2 inches at	97-144	inches of depth
	± 4 inches at	145-180	inches of depth
	± 6 inches at	181-300	inches of depth
	± 10 inches at	301-480	inches of depth
2. Horizontal position:	± 2 inches at	18-96	inches of depth
	± 4 inches at	97-144	inches of depth
	± 6 inches at	145-180	inches of depth
	± 12 inches at	181-300	inches of depth
	± 24 inches at	301-480	inches of depth

3.9.2.1 Safety Equipment

During drilling operations all equipment shall be effectively grounded and incorporate a system that protects operating personnel from electrical hazards. The system shall be equipped with an audible alarm that can sense if contact is made with an energized electric cable. Proper operation of the alarm system will be confirmed prior to the drilling of each tunnel. All equipment will be connected to ground with a copper conductor capable of handling the maximum anticipated fault current. Crew members operating drilling equipment and handling rods will do so while standing on

grounded wire mesh mats, ensuring that all equipment is grounded, and wearing hot boots, hot gloves, safety glasses and hard hats. Crewmembers operating handheld locating equipment will wear hot boots.

3.9.3 Pilot Hole Boring / Adjustments / Restarts

The entry angle of the pilot hole and the boring process will maintain a curvature that does not exceed the allowable bending radii of the product pipe. The Contractor shall follow the pipeline alignment as shown on the Drawings, within the specifications stated. If adjustments are required, the Contractor shall notify Franklin County for approval prior to making the adjustments.

3.9.4 Product Pipe Installation

After the pilot hole is completed, the Contractor shall install a swivel to the reamer and commence pullback operations. Pre-reaming of the tunnel may be necessary and is at the option of the Contractor.

a. Reaming diameter will not exceed 1.5 times the diameter of the product pipe being installed.

b. The product pipe being pulled into the tunnel will be protected and supported so that it moves freely and is not damaged by stones and debris on the ground during installation. The drilling fluid should remain in the tunnel to ensure the stability of the tunnel, reduce drag on the pulled pipe, and provide backfill with the annulus of the pipe and tunnel.

b. Pullback forces will not exceed the allowable pulling forces for the product pipe.

c. The Contractor shall allow sufficient lengths of product pipe to extend past the termination point to allow connections to the diffuser assembly. Pulled pipe will be allowed 24 hours of stabilization prior to making tie-ins. The length of extra product pipe will be at the Contractor's discretion.

d. The contractor shall allow at a minimum of 20 linear feet of directional-drilled pipe on each end of the installation. The additional pipe lengths shall be on a parallel plane with the existing grade at the point of connection to the Ductile Iron or PVC main.

3.9.5 Cleanup and Disposal of Drilling Fluid

The Contractor shall maintain the work site in a neat and orderly condition throughout the period of work and after completing the work at each site, remove debris, surplus material and temporary structures erected by the Contractor. The site shall be restored to a condition equal to the existing condition prior to being disturbed. Disposal of excess drilling fluid and spoils will be the responsibility of the Contractor who must comply with all relevant regulations, right-of-way, work space and permit agreements. Excess drilling fluid and spoils will be disposed at an approved location. The Contractor is responsible for transporting all excess drilling fluid and spoils to the disposal site and paying any disposal costs. Excess drilling fluid and spoils will be transported in a manner that prevents accidental spillage onto roadways. Excess drilling fluid and spoils will not be discharged into sanitary or storm drain systems, ditches or waterways.

a. Drilling fluid returns (caused by fracturing of formations) at locations other than the entry and exit points will be minimized. The Contractor will immediately clean up any drilling fluid that surfaces through fracturing. Clean up of excess drilling fluid shall be accomplished by the means mobile spoils removal equipment.

b. Mobile spoils removal equipment capable of quickly removing spoils from entry or exit pits and areas with returns caused by fracturing will be present during drilling operations to fulfill the requirements of paragraphs b and c above. The Contractor shall not commence drilling operations without the presence of drilling fluid removal equipment. All excess drilling fluid shall be removed from the site(s).

c. The Contractor will be responsible for making provisions for a clean water supply for the mixing of drilling fluid.

d. The contractor shall contain all drilling fluids from the site until such time that the excess fluid may be removed from the site by mobile spoils removal equipment.

e. At no time shall the contractor allow excess drilling fluids to drain into water bodies such as streams, rivers, lakes, wetlands etc..

3.9.6 As-Builts

The Contractor shall provide to Franklin County a bore plan (boring log) to provide the as-built condition of the bore. This information shall include the pipe depth at intervals of 50 lf, which shall indicate the horizontal alignment with respect to a horizontal baseline.

3.10 FINISH OPERATIONS

3.10.1 Grading

Finish to grades indicated within one-tenth of a foot. Provide sod or topsoil in areas to be seeded or sodded in accordance with requirements specified in Section 4, "SITEWORK FOR PIPELINES." Grade areas to drain water away from structures and to provide suitable surfaces for mowing machines. Grade existing grades that are to remain but have been disturbed by the Contractor's operations.

3.10.2 Spreading Topsoil

Clear areas to receive topsoil for the finished surface of materials that would interfere with planting and maintenance operations. Scarify subgrade to a depth of 2 inches. Do not place topsoil when the subgrade is frozen, extremely wet or dry, or in other conditions detrimental to seeding, planting, or grading Spread topsoil to a uniform depth of 4 inches over the designated areas.

3.10.3 Borrow Area

Grade to drain properly. Maintain and restore borrow pits.

3.10.4 Disposition of Surplus Material

Surplus or other soil material not required or suitable for filling, backfilling, or grading shall be disposed of by the contractor.

3.10.5 Protection of Surfaces

Protect newly graded areas from traffic, erosion, and settlements that may occur. Repair or reestablish damaged grades, elevations, or slopes.

3.10.6 Pavement Repair

Repair pavement, curbs, and gutters as specified in Section 4, "SITEWORK FOR PIPELINES." Do not repair pavement until trench or pit has been backfilled and compacted as specified herein. Provide a temporary road surface of gravel crushed stone over backfilled portion until permanent pavement is repaired. Remove and dispose of temporary road surface material when permanent pavement is placed. As a minimum, maintain one-way traffic on roads and streets crossed by trenches. Fully open roads and streets to traffic within 14 days.

3.11 FIELD QUALITY CONTROL

Test backfill for moisture-density relations in accordance with ASTM D698 as specified herein. Perform density and moisture tests in randomly selected locations and in accordance with ASTM D 1556 as follows:

A. Backfill in Road Shoulders: One test per 2500 linear feet in each lift.

B. Backfill in Pavement Cuts: One test per 250 linear feet in each lift.

-- END OF SECTION --

DETAILED SPECIFICATIONS

SECTION 4: SITEWORK FOR PIPELINES

PART 1 GENERAL

1.1. REFERENCES

The publications listed below form a part of this specification to the extent referenced. The publications are referred to in the text by the basic designation only. Latest Revisions shall be applicable to all references.

AMERICAN SOCIETY FOR TESTING AND MATERIALS (ASTM)

ASTM C 602	Agricultural Liming Materials
ASTM E 11	Wire-Cloth Sieves for Testing Purposes

COMMERCIAL ITEM DESCRIPTIONS (CID)

CID A-A-1909	Fertilizer

NORTH CAROLINA DEPARTMENT OF TRANSPORTATION
STD. SPECIFICATIONS FOR ROADS AND STRUCTURES

Sections 846-1 through 846-3	Concrete Curb and Gutter, Curb and Gutter
Sections 848-1 through 848-3	Concrete Sidewalks and Driveways
Sections 850-1 through 850-3	Concrete Paved Ditch

1.2 SITE PREPARATION

1.2.1 Existing Facilities

The Contractor shall provide protection for all existing structures, buildings, and utilities against all construction activity. The Contractor shall protect and preserve Franklin County harmless against damage and claims resulting from these activities.

1.2.2 Streets and Highways

Effective barricades, danger signals and signs on all streets and in other locations where required for the protection of the work and the safety of the public, shall be provided, erected and maintained by the Contractor. Barricades and obstructions that encroach on, or are adjacent to, public rights of way shall

be properly lighted between the hours of sunset and sunrise. The Contractor shall conform to all city, state and local laws and regulations in the use of streets and highways. The Contractor shall be responsible for all damages occurring due to neglect or failure to meet these requirements. When dictated by conditions that might endanger the public, a watchman shall be provided to fulfill the requirements stated herein.

1.2.3 Traffic Flow and Continuance of Services

The work shall be arranged in a manner that will cause a minimum of disturbance to vehicular and pedestrian traffic. The Contractor shall provide adequate ingress and egress to both private and public property during all stages of construction. Without written approval from the city or utility company, existing services shall not be interrupted by the construction work.

1.3 PRELIMINARY WORK

1.3.1 Rights of Way

Adequate working space shall be cleared along the pipe lines and space shall be provided for control stakes and hubs. Trees and permanent structures not located within the right of way shall be removed only as directed.

1.3.2 Valuable Trees and Shrubs

When the construction work involves the removal of valuable trees and shrubs on existing public rights of way, the work shall be done in cooperation with the city, county, or state.

1.3.3 Protection of Private Property

The Contractor shall provide protection for privately owned trees and shrubs bordering the right of way and shall take full responsibility for any damage that does occur.

1.3.4 Roadways and Bridges

Existing roads, subject to interference by the Contractor's work, shall be kept open in all cases. The Contractor shall provide, erect and maintain, at his own expense, effective barricades on which shall be placed acceptable warning and/or detour signs at each side of any road obstruction caused by the operations of the Contractor. All barricades shall comply with OSHA requirements and State or local laws, whichever is most strenuous. The Contractor shall protect all public roads and bridges, which may be damaged by, interfered with, or given undue, wear by reason of the work, and shall repair or replace them if damaged, at his own expense, to the satisfaction of governmental authorities and Franklin County. When questions arise as to safe methods or suitable protection, the Contractor shall confer with Franklin County but full responsibility for results shall rest with the Contractor.

1.4 FENCES AND GATES

The Contractor shall not cut temporary openings or take down fences until he has contacted the property owner, tenant or occupant and arranged the ingress and egress to the right-of-way. The Contractor shall replace all fences and gates removed for construction in like kind. Payment for fence

and gate removal and replacement shall be by the Contractor. In each case where the fence is opened, braced posts shall be installed capable of holding the tension in the fence wires so that the adjacent fence spans will not become slack. Where temporary openings are immediately adjacent to the corner post, the fence shall be firmly attached to the brace post, and the fence wire shall be removed or cut at the corner post. At other locations the fence openings shall be made by cutting the wires near one of the braced fence posts. In both the above cases, a gate shall be installed by the Contractor. The Contractor shall be held responsible for damage to crops, livestock, or other property caused by his failure to keep fences, gates, and gaps in proper condition. Damage claims resulting from the Contractor's negligence with respect to construction and maintenance and use of these gates, fences and gaps shall be the Contractor's full responsibility.

1.4.1 Electric Fences

The continuity of electric fences shall be maintained at all times.

1.5 ARCHEOLOGICAL

If the Contractor, during the prosecution of work, encounters an unidentified archaeological or other cultural resource within the work area, the Contractor shall immediately stop work and notify Franklin County.

PART 2 MATERIALS

2.1 PATCHING MATERIALS

Asphalt and concrete patching materials shall be as described on the detailed drawings.

2.2 SEED

Provide State-certified seed of the latest season's crop delivered in original sealed packages, bearing producer's guaranteed analysis for percentages of mixtures, purity, germination, weed seed content, and inert material. Label in conformance with DOA FSA and applicable state seed laws. Wet, moldy, or otherwise damaged seed will be rejected.

2.2.1 Lime

ASTM C 602, commercial agricultural limestone containing a minimum of 85% of total carbonates and 15% magnesium. Provide the following ASTM E 11 graduation: 50% will pass through a 50 mesh screen and 90% will pass through a 10 mesh screen. The quality of lime and all operations in connection with the furnishing of this material shall comply with the requirements of the North Carolina Lime Law and regulations adopted by the North Carolina Board of Agriculture.

2.2.2 Fertilizer

Fertilizer mixtures not to exceed one percent granular dust and CID A-A-1909, as specified below. Organic, granular fertilizer containing the following minimum percentages, by weight, of plant food nutrients:

10 percent available nitrogen
20 percent available phosphorus
20 percent available potassium

2.2.3 Mulch

Acceptable mulch shall be the materials listed below or any approved locally available material that is similar to those specified. Low grade, musty, spoiled, partially rotted hay, straw, or other materials unfit for animal consumption will be acceptable. Mulch materials, which contain matured seed of species that would volunteer and be detrimental to the proposed overseeding or to surrounding farmland, will not be acceptable. Straw or other mulch material which is fresh and/or excessively brittle, or which is in such an advance stage of decomposition as to smother or retard the planted grass, will not be acceptable.

2.2.3.1 Straw

Straw shall be the threshed plant residue of oats, wheat, barley, rye or rice from which grain has been removed as approved by Franklin County.

2.2.3.2 Asphalt Binder

Asphalt binder material shall conform to the requirements of AASHTO M140, Type SS-1, or RS-1 as appropriate.

2.3 EROSION CONTROL MATERIALS

All erosion control matting, silt fencing, etc.; shall be as detailed on the project drawings.

2.4 DRIVEWAY STONE

ABC stone meeting NCDOT standards unless otherwise described on the project drawings.

PART 3 EXECUTION

3.1 GRAVEL DRIVEWAY REPAIR

Replace gravel in cut portions of driveways with 6" of compacted ABC stone

3.2 CLEARING AND GRUBBING

Clearing and grubbing shall be performed in areas indicated and where required for construction.

3.2.1 Clearing

Clearing shall consist of the felling, trimming, and cutting of trees into sections and the satisfactory disposal of the trees and other vegetation designated for removal, including downed timber, snags, brush, and rubbish occurring within the areas to be cleared. Cut off flush with or below the original ground surface trees, stumps, roots, brush, and other vegetation in areas to be cleared, except for trees and vegetation indicated or directed to be left standing. Apply herbicide in accordance with the manufacturer's label to the top surface of stumps designated not to be removed.

3.2.2 Tree Removal

Where indicated, remove designated trees and stumps from areas outside those areas specified for clearing and grubbing.

3.2.3 Pruning

Trim trees designated to be left standing within the cleared areas of dead branches 1 1/2 inches or more in diameter; and trim branches to heights and in a manner as indicated. Neatly cut limbs and branches to be trimmed close to the bole of the tree or main branches. Paint cuts more than 1 1/4 inches in diameter with an approved tree wound paint.

3.2.4 Grubbing

Remove and dispose of roots larger than 3 inches in diameter, matted roots, and designated stumps from the indicated grubbing areas. Excavate this material together with logs, organic and metallic debris, brush, and refuse and remove to a depth of not less than 18 inches below the original soil surface in areas indicated to be grubbed and in areas indicated as construction areas under this contract Fill depressions made by grubbing with suitable material and compact to make the new surface conform with the existing adjacent surface of the ground.

3.2.5 Disposal of Cleared and Grubbed Material

All refuse from the clearing and grubbing operation shall be disposed of either by burning or removal to a dump area that is approved by Franklin County. The Contractor shall obtain a burning permit from the city fire chief before any burning is started. Burning, if approved, shall be done in such a manner that does not create hazards such as damage to existing structures, trees and vegetation, interference with traffic and construction in progress. When the construction site is outside the city limits and burning is required, proper permits shall be obtained from the city, county or state officials. All disposals by burning shall be kept under constant supervision until all fires have been extinguished. All burning shall comply with all state and local laws relative to the building of fires.

3.3 PAVEMENT REMOVAL AND REPLACEMENT

3.3.1 Removal

When pipe is to be laid in or across existing paved streets, driveways, sidewalks and swales, the pavement shall be cut to true and neat lines as directed by Franklin County. Power driven cutting saws are preferred; pavement breakers driven by air compressors are acceptable if approved by Franklin County. All broken pavement shall be removed before trenching is started.

3.3.2 Replacement

The pipe trench shall be backfilled with granular select material to within 8 inches of the pavement surface, compacted and finished per the plan details or as directed by the N.C. Department of Transportation. Base and sub-base shall be maintained in a workmanlike manner until the surface has been replaced in a manner consistent with the plans and specifications. Cut areas shall be maintained by the Contractor in a safe, passable condition until paved. Should the area create a dusty condition, the Contractor shall remedy this condition by the use of water or calcium chloride.
Special care shall be given to the areas cut in traffic lanes and intersections by placing crushed stone and maintaining in a smooth condition at the Contractor's expense.

3.3.2.1 Asphalt Replacement

The edges of the asphalt shall be neatly trimmed to a new face and mopped with asphalt cement. The asphalt surface shall be placed and thoroughly rolled to a smooth, dense surface true to adjacent areas of the street. The asphalt surface course shall consist of Type I-2 bituminous concrete surface course in accordance with North Carolina Department of Transportation Specifications.

3.3.2.2 Concrete Replacement

Concrete replacement shall be performed in accordance with North Carolina Department of Transportation Standard Specifications for Roads and Structures, 1991, Sections 848-1 through 848-3 and 850-1 through 850-3.

3.3.2.3 Curb and Gutter Replacement

Existing curb and gutter removed, disturbed or destroyed by construction, shall be replaced or repaired in a manner consistent with North Carolina Department of Transportation Standard Specifications for Roads and Structures, 1991, Sections 846-1 through 846-3.

3.3.2.4 State Highway Crossings

All construction related to state highway crossings shall be in full compliance with all requirements of the permit and to the satisfaction of the Department of Transportation.

3.4 WETLANDS

In wetland areas where a compaction of the backfill cannot be obtained the Contractor shall install compacted gravel 6" below the pipe and up to the centerline of the pipe. Crushed stone or crushed gravel used for pipe bedding shall meet ASTM C33 gradation 57.

3.5 SEEDING AND MULCHING

3.5.1 General

Provide soil preparation, fertilizing, seeding, sprigging, and surface top dressing of all newly graded finished earth surfaces, unless indicated otherwise, and at all areas inside or outside the limits of construction that are disturbed by the Contractor's operations.

3.5.2 Soil Preparation

Remove existing topsoil to a minimum depth of 2 inches and stock pile. After areas have been brought to finish subgrade elevation, thoroughly till to minimum depth of 6 inches by scarifying, disking, harrowing, or other methods approved by Franklin County. Remove debris and stones larger than one inch in any dimension remaining on surface after tillage. Spread stock piled topsoil evenly to provide positive drainage. Provide off-site topsoil to meet indicated finish grade. Do not spread topsoil when frozen or excessively wet or dry. Thoroughly mix subgrade and topsoil and off-site topsoil to a depth of 8 inches by disking, harrowing, tilling or other method approved by Franklin County. Correct irregularities in finished surfaces to eliminate depressions. Protect finished prepared soil areas from damage by vehicular or pedestrian traffic. Provide off-site topsoil to meet indicated finish grade. After areas have been brought to indicated finish grade, incorporate fertilizer, pH adjusters, soil conditioners into soil a minimum depth of 6 inches by disking, harrowing, tilling, or other method approved by Franklin County. Remove debris and stones larger than one inch in any dimension remaining on the surface after tillage. Correct irregularities in finish surfaces to eliminate depressions. Protect finished topsoil areas from damage by vehicular or pedestrian traffic.

3.5.3 pH Adjustment

Lime shall be applied at the rate of 4,000 lbs. per acre and mixed thoroughly with the topsoil as the seed bed is prepared. During the handling and storing, the lime shall be cared for in such a manner that it will be protected against hardening and caking. Any hardened or caked lime shall be pulverized to its original condition before being used.

3.5.4 Fertilizer Application

Fertilizer used for topdressing on all project areas except slopes 2:1 and steeper shall be 10-20-20 grade and shall be applied at the rate of 500 lbs. per acre (560 kg per hectare). On slopes 2:1 and steeper the grade shall be 16-8-8. Upon written approval of Franklin County, fertilizer rate can be

adjusted provided the ratio for each grade remains the same to provide the same amount of plant food as the original analysis.

3.5.5 Seeding

Do not seed when ground is muddy frozen snow covered or in an unsatisfactory condition for seeding. If special conditions exist that may warrant a variance in the above seeding dates or conditions, submit a written request to Franklin County starting the special conditions and proposed variance. Apply seed within twenty-four hours after seedbed preparation. Sow seed by approved sowing equipment. Sow one-half the seed in one direction, and sow remainder at right angles to the first sowing.

Seed shall be a sewed per acre according to the following schedule:

January 1 – December 31

50#	(55 kg)	Tall Fescue
5#	(6 kg)	Centipede
50#	(55 kg)	Pensacola Bahiagrass
500#	(560 kg)	Fertilizer
4000#	(4500 kg)	Limestone

Slopes 2:1 and steeper and Waste and Borrow Locations:

January 1 – December 31

75#	(85 kg)	Tall Fescue
500#	(560 kg)	Pensacola Bahiagrass
500#	(560 kg)	Fertilizer
4000#	(4500 kg)	Limestone

Add 10# Kobe or Korean Lespedeza to the above mixtures May 1 – August 31. On cut and fill slopes 2:1 or steeper add 30# Sericea Lespedeza January 1 – December 31.

Quantities stated are in terms of total seed of the specified quantity. The types of seed shall be mixed thoroughly prior to sowing. All sowing of seed shall be completed within the time limit of the contract, or unless otherwise authorized by Franklin County.

3.5.5.1 Broadcast and Drop Seeding

Use broadcast or drop seeders. Sow one-half the seed in one direction, and sow remainder at right angles to the first sowing. Cover seed uniformly to a maximum depth of 1/4 inch in clay

soils and 1/2 inch in sandy soils by means of spike-tooth harrow, cultipacker, raking or other approved devices.

3.5.5.2 Drill Seeding

Use grass seed drills. Drill seed uniformly to average depth of 1/2 inch.

3.5.5.3 Hydroseeding

Mix seed, fertilizer, and wood cellulose fiber in required amount of water to produce a homogeneous slurry. When hydraulically sprayed on the ground, material shall form a blotter like cover impregnated uniformly with grass seed. Cover shall allow rainfall or applied water to percolate to underlying soil.

3.5.5.4 Rolling

Immediately after seeding, firm entire area except for slopes in excess of 3 to 1 with a roller not exceeding 90 pounds for each foot of roller width. If seeding is performed with cultipacker-type seeder or by hydroseeding, rolling may be eliminated.

3.5.6 Mulching

Mulch shall be applied immediately after seeding. The spreading of the mulch shall be by hand methods, blower, or other mechanical methods, provided a uniform covering is obtained. Mulch material shall be furnished, hauled and evenly applied on the area shown on the plans or designated by Franklin County. Straw shall be spread over the surface to a uniform thickness at the rate of three (3) tons per acre to provide a loose depth of not less than 1-1/2 inches nor more than three (3) inches. Mulch may be blown on the slopes and the use of cutters in the equipment for this purpose will be permitted to the extend that at least 95% of the mulch in place on the slope shall be 6 inches or more in length. When mulches applied by the blowing method are cut, the loose depth in place shall be not less than one (1) inch or more than two (2) inches.

3.5.6.1 Securing Mulch

The mulch shall be held in place by asphalt binder on all slopes greater than 3 to 1 or as directed by Franklin County. Where mulches have been secured by either of the asphalt binder methods, it will not be permissible to walk on the slopes after the binder has been applied.

3.5.6.2 Care and Repair

The Contractor shall care for the mulched area until final acceptance of the project. The Contractor shall be required to, at his expense, repair or replace any mulching that is defective or becomes damaged until the project is finally accepted. If the "Asphalt Spray" method is used, all mulched surfaces shall be sprayed with asphalt binder material so that the surface has a uniform appearance. The binder shall be uniformly applied to the mulch at the rate of approximately 8.0 gallons per 1,000 square feet, or as directed by Franklin County, with a minimum of 6.0 gallons and a maximum of 10 gallons per 1,000 square feet, depending on the type of mulch and the effectiveness of the binder

securing it. Bituminous binder material may be sprayed on the mulched slope areas from either the top or the bottom of the slope. An approved spray nozzle shall be used. The nozzle shall be operated at a distance of not less than four (4) feet from the surface of the mulch and uniform distribution of the bituminous material shall be required. A pump or an air compressor of adequate capacity shall be used to ensure uniform distribution of the bituminous material.

3.6 EROSION CONTROL

The Contractor is instructed to control sedimentation runoff by methods approved by Franklin Countys during the course of construction of this project. The Contractor is reminded that all work shall meet all applicable requirements of the rules and regulations of erosion and sediment control as published by the Department of Environment and Natural Resources, North Carolina Sedimentation Control Commission.

3.6.1 Sequence

A. Begin pipe laying activity.

B. Road shoulders and cleared and grubbed areas shall be seeded and mulched as per the specifications within 30 working days of pipe installation on all portions of the project. approval of final grade for disturbed road shoulders must be received from North Carolina DOT District Engineer prior to seeding and mulching.

C. Install erosion control devices as detailed in project plans as directed by Franklin County.

D. Call for on-site inspection by the sedimentation and erosion control inspector.

E. When construction is complete and all road shoulders are stabilized, call for inspection by the sedimentation and erosion control office.

F. When the site is approved, remove temporary silt fence and sediment basins and seed and mulch resulting disturbed areas.

G. When vegetation is established call for final site inspection.

3.6.2 Temporary Erosion Control Measures

All temporary erosion control features such as silt fence, sediment traps and stream bank stabilization measures shall be constructed according the project drawings.

3.5 MOWING

Mowing is not required.

PART 4 PAYMENT PROCEDURES

4.1 GENERAL

Payment for this work shall be at the Contractor's unit prices for estimated quantities of clearing and grubbing, asphalt patching, concrete patching, seeding and mulching and erosion control measures as called for herein and on the plan drawings. Payment shall be full compensation for furnishing, hauling and placing all materials called for by the detail indicated on the plans or the execution as described in these specifications, demolition of existing pavements and structures, disposal of all cleared and grubbed materials, removal of temporary erosion control measures, and all other incidentals necessary to complete the work.

4.2 MEASUREMENT AND PAYMENT

4.2.1 Clearing and Grubbing

Measurement of clearing and grubbing shall be by the acre completed and accepted. The measured quantity for clearing and grubbing shall be paid for at the Contractor's unit price for Clearing and Grubbing as furnished in the Schedule of Bid Items.

4.2.2 Patching

Measurement of asphalt and concrete patching for roadways and driveways shall be by the square yard complete in place and accepted. Measurement of concrete for curb and gutter repair shall be by the linear foot complete in place and accepted. Measurement of gravel for driveway repair shall be by the ton. The measured quantities for patching shall be paid for at the Contractor's unit prices for the various line items described herein as furnished in the Schedule of Bid Items.

4.2.3 Seeding and Mulching

Measurement of seeding and mulching shall be by the acre completed and accepted. The measured quantity for seeding and mulching shall be paid for at the Contractor's unit price for as furnished in the Schedule of Bid Items.

4.2.4 Erosion Control Measures

Measurement of 8' wide erosion control matting and silt fence shall be by the linear foot completed and accepted. Measurement of rock check dams, sediment basins and inlet/outlet protection shall be measured according to unit completed and accepted. The measured quantities for erosion control measures shall be made at the Contractor's unit prices with respect to the particular line item as furnished in the Schedule of Bid Items.

-- END OF SECTION --

DETAILED SPECIFICATIONS

SECTION 5: DUPLEX SUBMERSIBLE SEWER PUMP STATION

PART 1 GENERAL

1.1REFERENCES

The publications listed below form a part of this specification to the extent referenced. The publications are referred to in the text by the basic designation only. Latest Revisions shall be applicable to all references.

AMERICAN SOCIETY FOR TESTING AND MATERIALS (ASTM)

ASTM A48	Gray Iron Castings
ASTM A126	Grey Iron Castings for Valves, Flanges and Pipe Fittings
ASTM A153	Zinc Coating (Hot-Dip) on Iron and Steel Hardware
ASTM A536	Ductile Iron Castings
ASTM A743	Castings, Iron-Chromium, Iron-Chromium-Nickel, Corrosion Resistant, for General Application
ASTM B3	Copper Alloys in Ingot Form
ASTM C478	Precast Reinforced Concrete Manhole Sections
ASTM C858	Underground Precast Concrete Utility Structures
ASTM C890	Standard Practice for Minimum Structural Design Loading for Monolithic or Sectional Precast Water and Wastewater Structures
ASTM C990	Joints for Concrete Pipe, Manholes, and Precast Box Sections Using Preformed Flexible Joint Sealants

AMERICAN SOCIETY OF MECHANICAL ENGINEERS (ASME)

ASME/ANSI B16.1	Cast Iron Pipe Flanges and Flanged Fittings
ASME B40.1	Gauges–Pressure Indicating Dial Type–Elastic Element

AMERICAN WATER WORKS ASSOCIATION (AWWA)

AWWA C104/A21.4	Cement-Mortar Lining for Ductile-Iron Pipe and Fittings for Water
AWWA C110/A21.10	Ductile-Iron and Gray-Iron Fittings, 3 in. Through 48 in., for Water and Other Liquids
AWWA C111/A21.11	Rubber-Gasket Joints for Ductile-Iron Pressure Pipe and Fittings
AWWA C115/A21.15	Flanged Ductile-Iron Pipe with Ductile-Iron or Gray-Iron Threaded Flanges
AWWA C509	Resilient-Seated Gate Valves for Water and Sewerage Systems

NATIONAL ELECTRICAL MANUFACTURERS ASSOCIATION (NEMA)

NEMA ICS 1	Industrial Controls and Systems
NEMA MG 1	Motors and Generators

1.2 SYSTEM DESCRIPTION

A duplex submersible sewer pump station including circular precast concrete wet well, valve vault, 4" non-clog submersible sewage pumps with lift out rail assemblies, valves and piping, float switches, and controls.

1.2.1 Franklin County requires an additional third pump be provided as a spare for any duplex installations.

1.3 SUBMITTALS

Submit six (6) copies of the following to Franklin County for approval before beginning construction.

1.3.1 Product Data

A. Pump characteristic curves showing capacity in gpm, net positive suction head (NPSH), head, efficiency, and pumping horsepower from 0 gpm to 110 percent (100 percent for positive displacement pumps) of design capacity. A complete list of equipment and material, including manufacturer's descriptive data and technical literature, performance charts and curves, catalog cuts, and installation instructions.

B. Spare parts data for each different item of material and equipment specified, after approval of the related submittals, and not later than 1 month prior to the date of beneficial occupancy. The data shall include a complete list of parts and supplies, with current unit prices and source of supply.

C. Piping Materials including joints, fittings, and couplings.

D. Gate Valve and Check Valves.

E. Access Hatches

Submit manufacturer's standard drawings or catalog cuts for C, D, and E above.

1.3.2 Shop Drawings

A. Precast Concrete Wetwell and Valve Vault

B. Metal Items

C. Drawings containing complete wiring and schematic diagrams and any other details required to demonstrate that the system has been coordinated and will properly function as a unit. Drawings shall show proposed layout and anchorage of equipment and appurtenances, and equipment relationship to other parts of the work including clearances for maintenance and operation.

1.3.3 Instructions

Diagrams, instructions, and other sheets proposed for posting.

1.3.4 Reports

Performance test reports in booklet form showing all field tests performed to adjust each component and all field tests performed to prove compliance with the specified performance criteria, upon completion and testing of the installed system. Each test report shall indicate the final position of controls.

1.3.5 Operation and Maintenance Manuals

Three (3) copies of operation and three (3) copies of maintenance manuals for the equipment furnished. One complete set prior to performance testing and the remainder upon acceptance. Operation manuals shall detail the step-by-step procedures required for system startup, operation, and shutdown. Operation manuals shall include the manufacturer's name, model number, parts list, and brief description of all equipment and their basic operating features. Maintenance manuals shall list routine maintenance procedures, possible breakdowns and repairs, and troubleshooting guides. Maintenance manuals shall include piping and equipment layout and simplified wiring and control diagrams of the system as installed. Manuals shall be approved prior to the field-training course.

1.4 DELIVERY AND STORAGE

All equipment delivered and placed in storage shall be stored with protection from the weather, excessive humidity and excessive temperature variation; and dirt, dust, or other contaminants.

1.5FIELD MEASUREMENTS

The Contractor shall become familiar with all details of the work, verify all dimensions in the field, and shall advise the Engineer of any discrepancy before performing the work.

PART 2 PRODUCTS

2.1 GENERAL MATERIAL AND EQUIPMENT REQUIREMENTS

Materials and equipment shall be the standard products of a manufacturer regularly engaged in the manufacturer of such products and shall essentially duplicate items that have been in satisfactory use for at least 2 years prior to bid opening. Equipment shall be supported by a service organization that is, in the opinion of the Engineer, reasonably convenient to the site. Pump casings shall be constructed of cast iron of uniform quality and free from blowholes, porosity, hard spots, shrinkage defects, cracks, and other injurious defects. Pump impellers shall be ductile iron unless otherwise specified.

2.1.1 Nameplates

Each major item of equipment shall have the manufacturer's name, address, type or style, model or serial number, and catalog number on a plate secured to the item of equipment.

2.1.2 Equipment Guards

Belts, pulleys, chains, gears, projecting setscrews, keys, and other rotation parts so located that any person may come in close proximity thereto shall be enclosed or guarded.

2.1.3 Special Tools

One set of special tools, calibration devices, and instrument required for operation, calibration, and maintenance of the equipment shall be provided.

2.1.4 Electric Motors

Motors shall conform to NEMA MG 1.

2.1.5 Motor Controls

Controls shall conform to NEMA ICS 1.

2.1.6 Bolts, Nuts, Anchors, and Washers

Bolts, nuts, anchors, and washers shall be steel; galvanized in accordance with ASTM A 153.

2.1.7 Pressure Gauges

Three pressure gauges shall be provided and located in the valve vault. Two of the gauges will be plumbed to the individual pump outlet mains on the pump side of the check valve. The third gauge will be plumbed to the common header force main on the downstream side of the check valve. Combination pressure gauges shall be glycerin filled with a built-in pressure snubber and have 4-1/2 inch minimum diameter faces and be turret style, black phenolic case with clear glass face. The movement shall be rotary, of 400 Series stainless steel with Teflon coated pinion gear and segment. The gauge shall be bottom connected and accept a 1/4" NPT female thread. Two ¼" ball valves shall be provided with each gauge for isolation and venting and to facilitate easy removal of the gauge. All gauges will be directly tapped to the spring line of the pipeline. Incidental brass fittings will be provided to properly plumb the connection so the gauge may be easily viewed from inside the valve vault. Combination pressure gauge range and scale graduations shall be in psi and feet of water as follows:

Outlet Pressure: 0 to 100 psi, 10 psi figure intervals, with graduating marks every 2 psi.

The gauges shall be Ashcroft Model 1279ASL or approved equal.

2.2 SUBMERSIBLE CENTRIFUGAL PUMPS

Submersible centrifugal pumps shall be centrifugal type pumps designed to pump solids up to 3 inches in diameter and shall be capable of withstanding submergence of required for the particular installation.

2.2.1 Pump Characteristics

Pump Station designs and submittals shall include the following operating characteristics:

A. Pump Service: Sewage.

B. Design Operating Point: Flow in GPM, TDH in feet, minimum 45% efficiency.

C. Electrical Characteristics: (volts ac, 3 phase, 60 Hz).

D. Motor Size: (Hp).

E. Pump Controls: Float Switch, Duplex Control Panel NEMA 3R with H.O.A. alternating pumps.

F. Manufacturer: Fairbanks Morse 4" 5434 MV, or equal Flyght, ABS, or Davis-EMU pump model.

2.2.2 Pump Casing

The casing shall be capable of withstanding operating pressures 50 percent greater than the maximum operating pressures. The volute shall have smooth passages, which provide unobstructed flow through the pump.

2.2.3 Mating Surfaces

Mating surfaces where watertight seal is required, including seal between discharge connection elbow and pump, shall be machined and fitted with nitrite rubber O-rings. Fitting shall be such that sealing is accomplished by metal-to-metal contact between mating surfaces, resulting in proper compression of the O-rings without the requirement of specific torque limits.

2.2.4 Coatings

Exterior surfaces of the casing in contact with sewage shall be protected by a sewage resistant coal tar epoxy coating. All exposed nuts and bolts shall be stainless steel.

2.2.5 Impeller

Impeller shall be matched to its constant velocity equalizing pressure volute, and be of the enclosed two-vane, radial flow design with large openings, blunt well-rounded leading edges thick hydrofoil shape tapered to the trailing edge, and a circular flow pattern to prevent the accumulation of solids and stringy material. It is to be balanced and secured to the shaft by means of a key and fastener. Wiper vanes are not allowed. Impeller waterways and clearance between the pump's full diameter impeller periphery and volute cutwater shall be trimmed to specifically meet the conditions of operation. The impeller is adjustable by the use of shims to restore the wear ring clearance in the field.

2.2.6 Volute and Sliding Bracket

Volute is to be cast with extra thick walls made of close-grained cast iron conforming to ASTM A48, Class 30. It is to be one-piece, constant velocity equalizing pressure with smooth fluid passages large enough to pass any size solid that can pass through the impeller. The volute shall have an integral tapered suction inlet area to direct flow to the impeller eye and have a centerline-flanged discharge. Volute discharge shall be minimum 4" diameter as measured on the inside diameter of the discharge flange opening. Volute shall be fitted with an axial stainless steel wearing ring with minimum 410-484 Brinnell hardness. The sliding bracket assembly shall be a part of the pumping unit constructed so that when lowered to the discharge base/elbow, the knifing action of the vertical metal-to-metal seal provides a self-cleaning, non-clogging, non-sparking UL listed explosion proof assembly.

2.2.7 Discharge Base

The installation shall include a rigid discharge base-elbow to support the total weight of the pumping unit. The base is to be bolted directly to the floor with the 90 degree elbow having a 125 lb. ANSI flange discharging vertically.

2.2.8 Motor

Pumps shall be driven by completely sealed, electric submersible squirrel cage induction motors. The motor nameplate horsepower rating should exceed the brake horsepower requirements of the specified head and capacity conditions and have a minimum full load efficiency of 90%.

Submersible equipment shall be UL Listed for Class I, Division 1, Groups C and D explosion-proof hazardous locations as defined by the National Electric Code. All electrical parts shall be housed in an oil-filled cast iron, watertight enclosure that is sealed by the use of O-rings and rabbeted joints with extra large overlaps.

The stator-winding and lead shall be insulated with moisture resistant Class F insulation for continuous duty in 40 degree C ambient. The motor shall be designed for continuous duty capable of ten (10) starts per hour. Automatic reset, normally closed thermal overloads shall be imbedded in the motor winding to provide overheating protection. Motor winding thermostats must be connected to an electric controller per local and state codes and the National Electric Code.

2.2.8.1 Motor Shaft

Motor shaft shall be one-piece, 416 stainless steel. Carbon steel shafts of shaft sleeves are not acceptable. Rotor is to be dynamically balanced to meet NEMA vibration limits; all external hardware is to be stainless steel.

2.2.8.2 Power and Control Cables

Cable leads are to enter at the top of the motor, and are to allow the cable-to-motor connection to be accomplished in the field without soldering. All power and control lead wires are to be double sealed as it enters the motor in such a manner that cable-wicking will not occur. This sealing system shall consist of a rubber grommet followed by epoxy that is high in adhesive qualities and has a low coefficient of expansion. Each cable wire is to have a small section of insulation removed to establish a window area of bare wire and each wire is to be untwisted and surrounded by epoxy potting material. A cable strain relief mechanism shall be an integral part of this sealing system. Cable sealing system shall be capable of withstanding an external pressure test of 1,200 PSI as well as a cable assembly pull test as required by Underwriters Laboratories. Singular grommet or other similar sealing systems are not acceptable. Motor shall be supplied with sufficient amount of multi-conductor type "SOW-A" or "W" power cable and control cable. Cable sizing shall conform to NEC specifications and be UL listed.

Power and control leads shall be terminated on a sealed terminal board. The terminal board and its bronze lugs shall be O-ring sealed.

2.2.8.3 Seals

Pumps shall be provided with two separate tandem-mounted mechanical seals to prevent the pumped liquid from entering the rotor/stator cavity area to ensure reliability of operation. The upper and lower seals are mounted to rotate in the same direction.

The upper seal is to be completely immersed in an oil bath and seals the oil chamber and the motor housing. The lower seal mating surfaces are to be immersed in the oil bath sealing the pump volute and the oil chamber. Each seal shall be held in contact by its own spring system and required neither maintenance nor adjustment, but shall be easily inspected and replaceable. The lower seal spring shall be protected from trash in the pumped fluid by a spring cover, which extends over the entire length of the compressed seal spring. Pressure generated by the pump assists in sealing the mating surfaces of the lower seal.

Seal material for the upper seal shall be stainless steel and Buna-N components, carbon rotating face and Ni-resist stationary face. Lower seal construction shall be stainless steel and Buna-N components, carbon rotating face and ceramic stationary face.

Two moisture detection probes shall be installed so that they will detect moisture in either the seal or stator cavity measuring resistivity between the probes. They shall be wired internally to the control cable connection at the top of the motor. Float type devices located in the rotor/stator area or single probe-to-ground moisture detectors measuring continuity are not acceptable. O-ring sealed inspection plugs shall be provided in the mechanical seal oil chamber for ease in inspection, draining and filling of oil.

2.2.8.4 Bearings

The pump shall rotate on an oil lubricated-for-life thrust bearing and oil lubricated radial bearing with a minimum L10 life of 50,000 hours. Lower shaft bearing shall be locked in place to prevent shaft movement and to take thrust loads.

2.2.8.5 Lifting Bail

A heavy-duty stainless steel lifting bail shall be included and be of adequate strength to lift the entire pump and motor assembly.

2.2.9 Rail Mounted Installation Systems

Dependent upon the pump manufacturer's requirements, the Contractor shall install a single rail or double rail system. Rails shall be Schedule 40 Stainless Steel and shall be provided to guide each pump when being raised or lowered in the sump and mounted on the discharge base/elbow. The rails shall align the pump with the discharge elbow as it is lowered into place. A ductile iron upper rail guide bracket shall be furnished to support and align the rail(s) at the top of the sump. For rail lengths greater than 20 feet, a stainless steel intermediate tail guide bracket shall be included.

2.2.9.1 Lifting Chain

A Lifting chain to raise and lower the pump through the limits indicated shall be provided. The chain shall be stainless steel and shall be capable of supporting the pump.

2.2.9.2 Portable Davit Crane

The Davit Crane shall have a base mounted on a concrete pedestal as indicated in the plan drawings and be capable of handling the required load of the pump. The Davit Cranes shall have a corrosion resistant finish with electrostatic powder coating and shall be equipped with Quick Disconnect Anchors. The Davit Cranes shall be capable of 360-degree rotation and shall have spur gear hand winches with brake. The worm gear hand winch shall accept power driven drill motor. The Davit Cranes shall be manufactured by Thern Incorporated or equal.

2.2.10 Central Control Panel and Level Controls

The pump station control panel shall be mounted in a NEMA 3R fiberglass or stainless steel enclosure with outside dead front design and hasp for padlocking. The panel shall be designed for the electrical service as stated in above. Control and alarm circuits shall operate on 115-volt service.

The panel shall be equipped with properly sized normal and emergency main circuit breakers that shall be mechanically interlocked. Circuit breakers shall also be provided for both pumps and for control. All circuit breakers shall be thermal magnetic type. A reduced voltage soft starter, Square D or approved equal as specified in Paragraph 2.2.12, non-adjustable quick trip ambient compensated overload relay, amber running indicator light, hand-off-automatic selector switch and run-time indicators shall be provided for each pump.

The panel shall also be equipped with an alternating relay to reverse the lead pump selected on each successive start. An override circuit shall start both pumps if wet well level rises to the "Lag" start elevation or shall start the second pump if the lead pump fails to start or shuts off prematurely. If the fourth (or TCP) float rises then a high water alarm shall turn on, which would alarm by a light and horn. Provide horn with silence push button. Provide an audio/visual alarm mounted on the outside of the lift station. The horn shall be rated at 90-100 dB SPL at 4-feet on axis with an output frequency between 1000 and 2000 Hz built per NEMA ICS 2.212, as indicated and necessary. Provide a flashing red light with long life bulb in guarded enclosure.

Provide properly protected control transformer and NEMA 5-15R GRI duplex 120 volt receptacle. Seal failure relays furnished with pumps shall be installed in panel. Provide red pilot lights to indicate seal failure. A terminal strip shall be provided for easy connection of cords from pumps and float switches. To insure good connections, schematic wiring diagram shall be posted inside the panel door.

Four sealed mercury tube float switches shall control wet well level. All floats shall be of Type S30NO Floats by Anchor Scientific Corp. provided with a sufficient amount of flexible cord attached to a stainless steel bracket mounted at the top of the wet well. A 650-volt lightning arrestor shall be installed inside the control panel.

2.2.11 Automatic Dialing Alarm Monitor

Provide dialer for each sewage pump station. The monitor shall be a micro-processor based system capable of sensing a minimum of four (4) alarm conditions on site, dialing up to eight (8) Owner selected phone numbers in succession using standard pulse dialing or touch tone dialing, and delivering a message describing the alarm conditions and identifying site location in an electronic synthesized voice. The unit shall be field programmable using vocabulary from a list of no less than 65 to 100 words permanently stored in the unit. Phone numbers will continue to be called during an alarm condition until notification of the call is acknowledged by either calling the unit back or by pressing a touch tone key. If the alarm condition is not attended to prior to a preset period of time, notification of the alarm conditions will begin again. The unit shall be able to provide a status report on all monitored variables by placing a local or long distance telephone call to the unit at any time. A standard private line shall be utilized, no dedicated or leased line shall be required. The unit shall be mounted in the control panel of each pump station to monitor alarm conditions at each site. This system shall be Microtel MCS-200, RACO Chatterbox Model CB-4 or equal.

2.2.12 Reduced Voltage Solid State Soft Starters

The soft starter shall be provided by the manufacturer in an enclosure rated as NEMA Type 12 for Industrial use. The enclosure shall include a door mounted digital keypad for adjusting the soft start parameters and viewing the motor, soft start and fault status without opening the enclosure door. Provisions shall be available for padlocking the enclosure door. The enclosed product shall be provided complete with an overcurrent protective device (OCPDs) for Type 1 short circuit protection. The soft start shall utilize a thyristor (SCR) bridge consisting of at least two SCRs per phase to control the starting and stopping of industry standard motors. The soft start shall provide torque control for linear acceleration without external feedback independent of motor load or type of application. The gating of the thyristors will be controlled in such a manner to ensure smooth and stable acceleration ramp. The soft start shall be controlled by a microprocessor that continuously monitors the current and controls the phasing of the SCRs. Analog control algorithms shall not be allowed. All soft start power ratings will utilize the same control module. A shorting contactor shall be supplied with soft starts rated 47 A or above in Type 12 enclosures. Protective features and deceleration control options integral to the soft start shall be available even when the shorting contactor is employed.

2.2.12.1 Ratings

The soft start shall be designed to operate in an ambient temperature 0°C to 40°C. For ambient temperatures between 40°C and 60°C, derate the current by 1.2% per °C above 40°C. Storage temperature range shall be -25°C to 70°C. Maximum relative humidity shall be 93% at 40°C, non-condensing. The soft start shall be designed to operate in altitudes up to 3300 ft. For higher altitudes, derate by 0.5% for each additional 330 ft. The soft start shall be capable of operation between -15% and +10% of nominal voltage rating. The soft start shall automatically adapt for operation at 50 or 60 Hz. Frequency tolerance shall be ± 5% when starting and between +5% and -15% during steady state operation. The soft start shall be capable of supplying 300% of rated full load current for 30 seconds at maximum ambient temperature. The SCRs shall have a minimum P.I.V. rating of 1400 Vac. Lower rated SCRs with protection by MOVs are not acceptable.

2.2.12.2 Adjustments and Configurations

All dialogue functions, display units, remote functions, terminal blocks, configuration switches and adjustment potentiometers shall be accessible on the front of the control module. Exposure to control circuit boards or electrical power devices during routine adjustments is prohibited. Digital indication shall provide, as a minimum, the following conditions:

- Soft start status - ready, starting/stopping, run.
- Motor status - current, torque, thermal state, power factor.
- Fault status - Motor thermal overload, starter thermal fault, phase fault, frequency fault, supply fault, locked rotor fault, motor underload, max start time exceeded, external fault, serial link fault, phase inversion, internal failure, overcurrent.

The starter must be preset to the following for adjustment-free operation in most applications:

- Torque acceleration ramp of 10 seconds.
- Current limitation to 300% of the motor full load current rating.
- Class 10 overload protection.
- Motor current preset per NEC and UL tables for standard hp motors.
- A digital keypad shall be utilized configure the following operating parameters as required:
- Motor full load amps adjustable from 50 to 130% of the controller's rating.
- Current limitation on starting adjustable from 1.5 to 7 times rated motor current.
- Torque ramp adjustable from 1 to 60 seconds.
- Initial torque adjustable from 10 to 100% of nominal motor torque.
- Torque limit adjustable from 10 to 200% of nominal motor torque.
- Maximum start time adjustable from 10 to 999 seconds.
- Voltage boost adjustable from 50 to 100% of the nominal supply voltage.
- Selection of freewheel, soft stop or braking.
- Adjustable soft stop torque ramp time from 1 to 60 seconds.
- Threshold to change to freewheel following a soft stop from 0 to 100% of the nominal motor torque.
- Braking torque level adjustable from 0 to 100% effectiveness.
- Selection of Class 2, 10, 10A, 15, 20, 25 or 30 motor thermal overload protection.

A digital keypad shall be utilized configure the following controller parameters as required:

- Selectable automatic reset operation.
- Cancellation of the torque control loop for multi-motor installations.
- Adjustment of the stator loss estimation for specialty motors.
- Assignment of controller inputs and outputs.
- Activation of phase reversal protection.
- Reset of motor thermal state.
- Return to factory settings.
- Activation of test mode for use with low power motors.

- Indication of elapsed time in hours of starting, running and stopping.
- Output relays shall provide the following status indications:
    - One form A and one form B minimum for indication of fault or control of an isolation contactor.
    - 2. One form A for indication that torque ramp is complete and current is below 130% motor FLA (End of start).

Additional inputs and outputs shall be available to provide the following status indications:

- One logic input for force to freewheel, indication of external fault, force to local control, control of cascading motors, or external motor overload reset.
- One logic output for indication of motor thermal overload pre-alarm or presence of motor current and one logic output to indicate overcurrent alarm.
- One analog output shall be available for 4 to 20 or 4 to 20 milliamp indication of motor current, torque, thermal state, or power factor.
- Relay and I/O functions listed above must be isolated with respect to common.

2.2.12.3 Protection

A microprocessor controlled thermal protection system shall be included which continuously calculates the temperature-rise of the motor and soft start and provides:

- An overload pre-alarm, which indicates by relay contact that the motor has exceeded its rated temperature rise by 110%. This function shall be annunciation only.
- A thermal fault condition, which stops the motor if the temperature-rise, exceeds 120% of the motor thermal capability.
- An analog electronic circuit with a time-constant adjustable to the motor's thermal cooling time-constant ensuring the memorization of the thermal state even after power supply disconnection or shorting out of the power semiconductors.

The soft start shall provide phase loss, phase reversal, underload, stall, and jam protection. The integral protective features shall be active even if an external shorting contactor is used to bypass the SCRs during steady state operation.

2.2.12.4 Control Options

The soft start's control circuit shall be fed from the line supply and be completely independent of the power circuit and separate from the control logic. The peripheral soft start control circuitry shall be operated at 120 Vac 60 Hz from a control power transformer included within the enclosure. Operator devices shall be door mounted and shall be (choose all that apply:)

- Red STOP and green START push buttons.
- Three position H-O-A switch, which provides for manual (HAND) start or remote signal (AUTO) start from user-supplied relay contacts.

- Red STOP, green FORWARD, and amber REVERSE pushbuttons mounted on the door control island (available with reversing starter only).
- Red or green RUN pilot light illuminated whenever the soft start is provided a run command and no fault condition is present.
- Red or green OFF pilot light illuminated whenever the soft start is supplied with control power and no run command is present
- All operator devices shall be remote-mounted using supplied 120 Vac control logic. Clearly labeled terminals shall be provided for field installation.

2.2.12.5 Shorting Contactor

A microprocessor shall control the operation of the shorting contactor via an output relay. The shorting contactor shall close, shorting the thyristors after the motor current is below 130% of motor FLA and voltage is below nominal voltage (indicating ramp complete), and open on a stop command to allow a deceleration ramp. Overload protection integral to the soft start shall continue to protect the motor when shorting is utilized.

2.2.12.6 System Cooling

The unit shall be provided with a forced air thermal management system to allow for proper system cooling. The system shall consist of an intake fan located in the bottom side of the panel complete with polycarbonate grill, removable foam filter and composite air plenum. An exhaust grill and filter shall be provided in the upper side of the panel opposite the intake fan. The exhaust grill shall be polycarbonate and shall have a foam filter. Thermal management system shall be sized as follows:

- 1-40 hp: 55 cfm
- 50-300 hp: 140 cfm

The unit shall have a through-the-door disconnect mechanism that shall not allow the enclosure door to be opened when engaged. The unit shall have a non-fused disconnect rated for the horsepower application. The unit shall have a soft stop function that shall ramp the motor to stop over a programmable period from 0 to 60 seconds. The unit shall have a manual bypass contactor that shall allow operation of the motor load across the line through the selection of a bypass/soft start selector switch. Contactor shall be horsepower rated for the application.

2.2 PUMP STATION PIPING MATERIALS

2.3.1 Ductile Iron Flanged Pipe and Fittings

All pump station pipe and fittings shall be 4" ductile iron with flanged joints conforming to AWWA C115/A21.15 for pipe and AWWA C110/A21.10 for fittings. Bolts, nuts, and gaskets for flanged connections as recommended in the Appendix to AWWA C115/A21.15. Flange for set screwed flanges shall be of ductile iron, ASTM A 536, Grade 65-45-12, and conform to the applicable requirements of ASME/ANSI B16.1, Class 250. Setscrews for set screwed flanges shall be 190,000-psi tensile strength, heat treated and zinc-coated steel. Gasket for set screwed flanges shall conform

to applicable requirements for mechanical-joint gaskets specified in AWWA C111/A21.11. Design of set screwed gasket shall provide for confinement and compression of gasket when joint to adjoining flange is made. Pipe and fittings shall have cement-mortar lining conforming to AWWA C104/A21.4, standard thickness.

2.3.2 Gate Valves

Gate valves shall be manufactured to meet or exceed the requirements of ANSI/AWWA C509-94 or latest revision for 2" –16" valves. All valves shall be of iron body, bronze mounted, resilient-seat type. The sealing mechanism shall provide zero leakage at the water working pressure against line flow from either direction. Valves shall be manufactured with "O" Ringstem seals. The area between the "O"-Rings shall be filled with lubricant. Anti-friction washers shall be provided at the stem collar for inside screw design. Valves for aboveground use or for use inside vaults shall be NRS design with handwheel. Valves shall open by turning in a counterclockwise direction. The minimum valve design working water pressure shall be 200 psi. Valves shall be shell tested at 400 psi. Valve ends for use in above ground or vault installations shall be flanged joint. Resilient-seated gate valves shall be manufactured by American Darling, American Flow Control, U.S. Pipe, the Mueller Company or an approved equal.

2.3.3 Plug Valves

All plug valves shall be eccentric plug valves unless otherwise specified. Valves shall be on the non-lubricated eccentric type with resilient faced plugs and shall be furnished with flanged end connections as shown on the plans. Flanged valves shall be faced and drilled to the ANSI 125/150 lb. Standard. Valves bodies shall be of ASTM A126 Class B cast iron. Bodies in 4" and larger valves shall be furnished with a 1/8" welded overly seat of not less than 90% pure nickel. Seat area shall be raised, with raised surface completely covered with weld to insure that the plug face contacts only nickel. Screwed-in seats shall not be acceptable. Plugs shall be of ASTM A126 Class B cast iron. The plug shall have a cylindrical seating surface eccentrically offset from the center of the plug shaft. The interference between the plug face and body seat, with the plug in the closed position, shall be externally adjustable in the field with the valve in the line under pressure. Plug shall be resilient faced with neoprene or hycar, suitable for use with alum sludge. Valves shall have sleeve type metal bearings and shall be of sintered, oil impregnated permanently lubricated type 316 ASTM A743 Grade CF-8M in 1/2"-36" sizes. In valves larger than 36", the upper and lower plug journals shall be fitted with ASTM A-240 type 316 stainless sleeves with bearings of ASTM B30, Alloy C95400 aluminum bronze. Non-metallic bearings shall not be acceptable. Valve shaft seals shall be of the multiple V-ring type and shall be externally adjustable and repackable without removing the bonnet or actuator from the valve under pressure. Valves utilizing O-ring seals or non-adjustable packing shall not be acceptable. Valve pressure ratings shall be 175 psi through 12" and 150 psi for 14" through 72". Each valve shall be given a hydrostatic and seat test of up to 200 psi with test results being certified. Manual valves shall have lever or gear actuators and tee wrenches, extension stems, floor stands, etc., as indicated on the plans. Plug valves shall be DeZurik or approved equal.

2.3.4 Check Valves

A check valve shall be provided for each pump. Check valves installed in above ground vault installations shall be of the swing full body flanged type, with a domed access cover and only one

moving part, the valve disc. The valve body shall have full flow equal to the nominal pipe diameter at any point, through the valve. The seating surface shall be on a 45° angle to minimize disc travel. The top access port shall be full size, allowing removal of the disc without removing the valve from the pipeline. The access cover shall be domed in shape, to allow the disc to be fully operational in lines containing a high solids content. The disc shall be of one-piece construction, precision molded with an integral O-ring type sealing surface and contain steel and nylon reinforcements in the hinge and disc areas. The flex portion of the disc shall be warranted for twenty-five years. Non-slam closing characteristic shall be provided through a short 35° disc stroke and a memory retentive disc return action. Provisions shall be made for backflow capability. Provide all special tools, accessories, etc. required to back flush the valve. The valve body and cover shall be ASTM A126 Class B cast iron. The disc shall be Buna-N (NBR) ASTM D2000-BG. The interior of the valve shall be coated with an epoxy. The exterior shall be coated with a universal primer. The valve shall be the series 500 as manufactured by Val-Matic Valve and Manufacturing Corporation or approved equal.

2.4 PRECAST CONCRETE STRUCTURES

2.4.1 Circular Wet Well

The wet well structure shall conform to the latest ASTM C478 requirements for "Precast Reinforced Concrete Manhole Sections" and shall be designed fro H-20 loading. Concrete compressive strength shall be 4,000-psi minimum. The inside diameter of the wet well shall be a minimum of six feet with vertical dimensions as indicated by the plans. The base section shall include a 12" anti-floatation collar. All joints shall be tongue and groove with a butyl rubber sealant conforming to ASTM C990. Openings may be cast in or cored through the wall. Cast in pipe openings shall be provided with neoprene boosts sealed to pipe with stainless steel adjustable compression rings. Cored pipe openings shall have the annular space around pipes sealed with a "link seal" or hydraulic cement. A 3" PVC pipe vent with stainless steel wire mesh screen shall be provided on the top of the wet well. Steps shall be steel reinforced copolymer polypropylene and the requirements of ASTM C478. Fillets of hydraulic cement or grout shall be poured into the bottom of the wet well sloped at a 30 degree angle to the bottom from the perimeter of a rectangle centered directly under the pumps which shall remain as the bottom of the wet well. The dimensions of the rectangle shall be as required by the pump manufacturer.

2.4.2 Valve Vault

The valve vault structure shall conform to the latest ASTM C858 requirements for "Underground Precast Utility Structures" and shall be designed for H-20-44 loading. Concrete compressive strength shall be 4,000-psi minimum. Dimensions shall be as indicated by the plans. Steel reinforcing shall conform to ASTM C890 "Structural Design Loading for Water and Wastewater Structures" and shall utilize Grade 60 re-bars conforming to the requirements of ASTM A615. Steps shall be steel reinforced copolymer polypropylene and the requirements of ASTM C478. The vault shall be drained to the wet well as indicated by the plans. Openings may be cast in or cored through the wall. Cast in pipe openings shall be provided with neoprene boots sealed to pipe with stainless steel adjustable compression rings. Cored pipe openings shall have the annular space around pipes sealed with a "link seal" or hydraulic cement.

2.4.3 Aluminum Access Hatches

Aluminum access hatches as dimensioned on the drawings shall be cast to the wet well and valve vault top sections. The access hatches shall have a 1/4" thick one-piece mill finish, extruded aluminum frame, incorporating a continuous concrete anchor. Door panel shall 1/4" aluminum diamond plate, reinforced to withstand a live load of 300 pounds psf. Door shall open 90 degrees and automatically lock with a stainless steel hold open arm with aluminum release handle. Door shall close flush with the frame. Hinges and all fastening hardware shall be stainless steel. The unit shall lock with a non-corrosive locking bar and have a non-corrosive handle. Unit shall be guaranteed against defects in material and workmanship for a period of 10 years. All units shall have single leaf doors. Access hatch dimensions shall be as indicated on the drawings.

PART 3 EXECUTION

3.1 PUMP INSTALLATION

Pumping equipment and appurtenances shall be installed in the position indicated and in accordance with the manufacturer's written instructions. All appurtenances required for a complete and operating pumping system shall be provided, including such items as piping, conduit, valves, wall sleeves, wall pipes, concrete foundations, anchors, grouting, pumps, drivers, power supply, seal water units, and controls.

3.2 PAINTING

Pumps and motors shall be thoroughly cleaned, primed, and given two finish coats of paint at the factory in accordance with the recommendations of the manufacturer.

The interior the wet well shall be coated with one coat of coal-tar epoxy. All interior piping shall be coated with 2 coats of high-build catalyzed epoxy paint including piping inside the valve vault.

3.3 FIELD TESTING AND ADJUSTING EQUIPMENT

3.3.1 Operational Test

Prior to acceptance, an operational test of all pumps, drivers, and control system shall be performed to determine if the installed equipment meets the purpose and intent of the specifications. Tests shall demonstrate that the equipment is not electrically, mechanically, structurally, or otherwise defective; is in safe and satisfactory operating characteristics. Prior to applying electrical power to any motor driven equipment, the drive train shall be rotated by hand to demonstrate free operation of all mechanical parts. Tests shall include checks for excessive vibration, leaks in all piping and seals, correct operation of control systems and equipment, proper alignment, excessive noise levels, and power consumption.

3.3.2 Retesting

If any deficiencies are revealed during any test, such deficiencies shall be corrected and the tests shall be re-conducted.

3.3.3 MANUFACTURER'S SERVICE

Services of a manufacturer's representative who is experienced in the installation, adjustment, and operation of the equipment specified shall be provided. The representative shall supervise the installation, adjustment, and testing of the equipment.

3.4 FIELD TRAINING

A field-training course shall be provided for designated operating and maintenance staff members. Training shall be provided for a total period of 8 hours of normal working time and shall start after the system is functionally complete but prior to final acceptance tests. Field training shall cover all of the items contained in the operating and maintenance manuals.

3.5 QUALITY ASSURANCE

Pumps and motors are to be engineered, manufactured, and assembled in the United States under a written Quality Assurance program. This written Quality Assurance program shall have been in effect for at least five (5) years, and include a written record of periodic internal and external audits to confirm compliance with UL Quality Assurance specifications.

3.6 ISO-9001 CERTIFICATION

Pumps and motors shall be manufactured by ISO-9001 certified companies only.

3.7 WET WELL AND VALVE VAULT INSTALLATION

Earthwork for Wet Well and Valve Vault installation shall be according to Section 3 "Earthwork and Borings for Utilities". Wet Well and Valve Vault shall be placed on 12" of compacted stone bedding.

3.7.1 Wet Well Testing

A leakage test shall be performed on the precast concrete wet well after all pipes or pipe sleeves have been installed through the walls and sealed but before backfill around wet well has occurred. All piping shall be temporarily plugged so that water will not exit through the pipe but the sealed annular space between the outside of the pipe and the concrete well will be tested. The test shall be performed as follows:

A. Fill wet well to level one foot below the top of well with water supplied from the potable water system.

B. Allow to stand for at least 4 hours.

C. Add water as required to restore water level to one foot below top of well.

D. Allow to stand for 24 hours. Cover with plastic as necessary to prevent significant evaporation. If rainfall or other event interferes with test, repeat.

E. After 24 hours, inspect outside of wet well structure for appearance of leaks. Recheck water level. A drop in water level of less than 1/2" and no visible evidence of leaks will constitute acceptable leakage test.

F. If necessary, repair leaks and retest until acceptable.

3.8 Soft Starters

The soft start shall be installed per the manufacturer's specifications with a minimum clearance of 4 inches on each side of the enclosure. A standard wiring diagram shall be included for making the appropriate electrical connections. The services of a qualified manufacturer's technical representative shall be available to install, test, and start up all soft starts furnished under this contract.

-- END OF SECTION –

DETAILED SPECIFICATIONS

SECTION 6: EMERGENCY POWER SYSTEMS

PART 1 - GENERAL

1.1 SCOPE OF WORK

The Sewer Pump Station shall be equipped with an Emergency Power System comprised of a standby engine driven generator, Automatic Transfer Switch and appurtenances. The Emergency Power System shall be provided and installed complete in every respect so that upon failure of the normal source of power from the electrical utility, a separate local source of power shall automatically be provided to the power distribution systems. The Contractor shall furnish, install and connect an engine driven generator set, complete as hereinafter specified. The installation shall include exhaust silencer, exhaust pipe, electrical starting system, automatic transfer switch, outdoor enclosure, and all appurtenances needed for a complete installation as specified herein and as shown on the drawings.

1.2 REFERENCES

The publications listed below form a part of this specification to the extent referenced. The publications are referred to in the text by basic designation only. Latest Revisions shall be applicable to all references.

UNITED LABORATORIES (UL)

UL 1008	Transfer Switch Equipment

NATIONAL FIRE PROTECTION ASSOCIATION

Std. 110	Emergency and Standby Power Systems
99	Healthcare Facilities Handbook

1.3 SUBMITTALS:

Submit six (6) copies of the following to Franklin County for approval before beginning construction.

1.3.1 Shop Drawings

Drawings, details and instructions necessary for installation of the generating unit shall be submitted for approval prior to the purchase of any equipment. The Contractor shall provide the following certified drawings:

A. Manufacturer's general outline drawings and installation drawings for all equipment furnished.

B. Manufacturer's specifications and data for all equipment and material furnished.

B. Piping details showing general arrangement of fuel piping.

C Complete elementary diagrams of electrical equipment and associated apparatus including 3-line diagram of primary connections, schematic diagram of all potential device terminals and internal device diagrams.

D. Complete description of electrical characteristics of the generator.

E. Schematic diagrams of all control and alarm circuits.

F. Complete wiring diagrams of equipment showing connections of all component devices and equipment.

G. Internal wiring diagrams and piping diagrams of control panels.

H. Published ratings of the engine.

I. Certification of performance.

J. Generator Set Enclosure Details

1.3.2 Instructions and Manuals

The Contractor shall furnish operating and maintenance instructions and manuals as described in Paragraph 3.3.1 "Documentation.

1.4 STARTUP INSTRUCTION

Provision shall be made for instruction of Owner's operating personnel during the construction period, and a concentrated instruction course during the final check and acceptance test stages. Manufacturer's recommended parts lists of the equipment being furnished, with prices, shall be submitted to the Architect/Engineer as soon as possible after the award of the contract.

PART 2 PRODUCTS

2.1 EMERGENCY GENERATOR SET

The Emergency Generator Set shall be of a Kilowatt rating sufficient to power all electrical appurtenances on the pump station site at a 0.8 power factor. Generator sizing shall be done by a licensed engineer and shall be consistent with the power provided to the site under normal operating conditions. The emergency engine-generator set shall have a standby, 100% power service rating output for the duration of any commercial power outage capacity as specified and shall be the

product of a recognized nation-wide manufacturer regularly engaged in the production of this type equipment. All equipment shall be properly connected, complete in every respect and left ready for the desired service. All options, accessories and modifications from standard models shall be provided.

2.1.1 Engine

The engine shall be compression ignition model for diesel fuel that has been manufactured and successfully operated in similar service for a period sufficient to thoroughly establish its reliability. Natural gas fuel is also acceptable. The engine shall be 2 or 4 stroke cycle multi-cylinder design. The engine speed shall not exceed 1800 RPM at normal full load operation when equipped with all necessary operating accessories such as air cleaners, oil pump, water pump, generator, etc. In conformance with the requirements of NFPA 110 Standards for Emergency and Standby Power Systems, the engine shall produce sufficient power to pickup 100% of nameplate KW rating in one step, less applicable site conditions derating factors. Engine ratings shall not exceed the standby power service rating published by the manufacturer.

2.1.1.1 Fuel System

The engine shall be designed to operate on No. 2 fuel oil. The fuel system shall be that which is normally used by the diesel engine manufacturer and shall include secondary fuel filter, water separator, manual fuel priming pump, fuel shut-off solenoid, and all piping and appurtenances required for complete system. It shall include a fuel transfer pump and a replaceable fuel filter element conveniently located for servicing. The sub-base fuel tank assembly shall be welded steel construction and have the structural integrity to support the generator set and associated components. It shall include, but not be limited to: heavy gauge steel, double wall tank, with all welded construction, prime coated and finished painted outside. Minimum capacity shall be standard gallons for 24 hour operation. Secondary containment of fuel tank and all other accessories. Lockable fuel filter cap. Low fuel level alarm switch. Fuel level gauge. Inter-tank leak detection alarm switch. Fractional HP thermally protected motor. Fuel line check valve. Tank drain. Threaded pipe connections.

2.1.1.2 Battery Charging

The Battery Charger shall be automatic, solid-state, current limiting, and float equalizing. The charger shall maintain the battery at normal capacity and recharge battery after cranking. The charger shall be 120 volt input with appropriate output. It shall be capable of automatically switching from one rate to another rate to meet the needs of the discharged batteries. It shall be capable of recharging a completely discharged battery in a maximum of 8 hours. It shall also have: overload protection, voltage surge suppressers, D.C ammeter, D.C voltmeter, low D.C voltage alarm relay; with a minimum continuous output of 10 amperes D.C, battery charger malfunction alarm contact, and third-party listed.

2.1.1.3 Starting

The engine shall be equipped with 12 or 24 volt battery starting system with a minimum starting capacity, at 0 degree F, for 4-15 second cranks followed by a 15 second rest period. The engine batteries shall be the lead-acid type with rack mounting and cables. The starting motor shall incorporate a positive engagement drive and shall disengage automatically when the engine starts.

2.1.1.4 Governor
The engine governor shall maintain isochronous frequency regulation from no load to full rated load. The steady state operating band shall be within 0.25%

2.1.1.5 Lubricating System:

The engine shall have a lubricating oil pump for supplying oil under pressure to main bearings, crank pin bearings, pistons, pistons pins, timing gears, camshaft bearings and valve rocker mechanism. Full flow oil filters, conveniently located for servicing, shall be provided. Lube oil drain extension and valve terminated on the outside of the generator base shall be provided.

2.1.1.6 Air Cleaners

One or more dry type air cleaners shall be provided, as recommended by the manufacturer.

2.1.1.7 Exhaust

Critical grade silencer shall be provided to reduce engine exhaust noise to a maximum dBA level of 85 at a distance of 10 feet. If the equipment is located outside, the silencer with piping shall be mounted on top of the weatherproof enclosure, the exhaust silencer outlet shall be terminated with a tailpipe (45 degree cut) or an exhaust elbow and raincap. If the equipment is located inside the building, the exhaust piping shall extend through the building sidewall using a ventilated thimble discharge (horizontal discharge with tailpipe 45 degree cut, or vertical discharge with a raincap. Piping shall be schedule 40, black steel; piping inside the building shall be insulated. A seamless stainless steel flexible connector shall be installed on the engine exhaust outlet.

2.1.1.8 Engine Block Heater

A single phase, thermostatically controlled, immersion type engine coolant heater shall be provided. Minimum coolant temperature shall not be less than 120 degree F. Each heater shall be provided with contactor in a rated NEMA enclosure. Heater(s) shall be disconnected while the engine is running.

2.1.1.9 Cooling System

A closed recovery cooling system with sufficient capacity shall be provided to cool the engine when the generator set is delivering full rated load at minimum ambient temperature of 105 degree F. A radiator, fan, engine-driven centrifugal water pump, and thermostatic valve shall be provided. System shall be protected against freezing and corrosion. Radiator duct flange shall be provided for equipment installed inside the enclosure.

2.1.1.10 Base and Vibration Isolators

The engine-generator assembly shall be fastened to a welded steel base, which shall allow mounting to a raised concrete pad or the sub-base fuel tank. Anchor bolts and vibration isolators shall be used to mount the heavy steel base to the concrete pad. Vibration isolators, either integral or external, shall be provided and installed as recommended by the manufacturer. Vibration isolators shall be one-piece units resistant to corrosion and environmental degradation. When sub-base tanks are specified, vibration isolators shall be located between the generator set and the fuel tank.

2.1.2 Generator

The generator shall be sized appropriately to provide service to the site and shall operate at the rated capacity with a 0.8 power factor. The rating shall be applicable for continuous service in stand-by application. The Generator shall be revolving field type, close-coupled or directly coupled to the engine flywheel. The generator housing shall have a single ball bearing support for the rotor. The rotor shall be dynamically balanced up to 25% overspeed. The generator shall have Class F or H insulation as recognized by NEMA. The field shall be equipped with full amortisseur windings. The voltage regulator shall be of the solid-state design and provide volts-per- hertz operation. It shall be mounted on top or side of the generator and enclosed in a "NEMA RATED" enclosure. A built-in voltage adjusting rheostat shall provide 10% voltage adjustment. An isolation transformer in the voltage regulator circuit shall be provided.

2.1.2.1 Generator Set Main Circuit Breaker

A molded case, thermal magnetic, circuit breaker in suitable enclosure for generator 300KW and smaller shall be provided. Electronic type circuit breaker can be used for generators 400KW and larger. A resettable three phase line current sensing circuit breaker with inverse time verses current response, set to open after a 10 second fault condition, shall be provided for generators 1000KW and larger. The generator circuit breaker shall be third-party listed.

2.1.2.2 Generator Performance

The voltage regulation from no load to rated load shall be within a 2% band of rated voltage. Steady state voltage modulation shall not exceed one cycle per second. For any addition of load up to and including 90% of rated, the voltage shall recover to and remain within the steady band in not more than 1.5 seconds. The voltage dip shall not exceed 20% of the rated voltage at any time. The frequency regulation from no load to rated load shall conform to the engine governor performance. For any addition of load up to 90% of rated load, the frequency shall recover to the steady state frequency within 5 seconds.

2.1.2.3 Generator Control Panel

Provide a control panel, in an appropriately rated NEMA enclosure, mounted on the generator by use of vibration isolators. In addition to the control panel, the generator set shall be furnished with all necessary devices (switches, sensors, etc.) and wiring harnesses as required providing a fully functional control system. The control panel shall contain, as a minimum, the following: frequency meter, A.C voltmeter, A.C ammeter; devices shall have 2% full scale accuracy, combination

voltmeter/ammeter phase selector switch, D.C voltmeter, oil pressure gauge, coolant temperature gauge, running time meter, voltage adjustment rheostat, solid state starting alarm and shutdown controls, "run-off/reset-auto" mode selector switch, alarm horn with silencing switch, terminal board for interconnection to remote annunciator, and lamps latched annunciation and shutdown for high temperature/low water, sensor loss, low oil pressure, overcrank, overspeed, low battery voltage, and low fuel level.

2.1.2.4 Remote Annunciator Panel

The remote annunciator panel shall be designed to operate on the battery system voltage, either 12 or 24 D.C volts, and shall provide monitoring and alarm service at a visible and accessible location. Legally required systems shall comply with NFPA 99 and 110.

A. The remote annunciator shall include a lamp test switch and an alarm horn with a silencing switch.

B. The remote annunciator shall include the following indicator lights for shutdown conditions: high water temperature/low coolant level, low oil pressure, over speed, over crank.

C. The remote annunciator panel shall include the following indicator lights for status/alarm: system ready, mode selector switch not in auto position, pre-alarm high water temperature, pre-alarm low oil pressure, low water temperature, low fuel level; diesel only, intertank leakage detection; diesel only, low battery voltage, battery charger malfunction, line power, generator, emergency stop on generator control panel activated.

2.1.3 Outdoor Enclosure

A steel, weather protective enclosure with a minimum ambient capability of 110 degree F shall be provided. The enclosure shall be painted ASA 61 gray utilizing an electrostatically applied, powder baked polyester paint. Sheet metal shall be 14 gauge galvanized steel which shall be zinc phosphate treated prior to paint. All sheet metal shall be painted prior to assembly to ensure all surfaces, including edges, are fully painted to prevent rust. All hardware shall be zinc plated or stainless steel. Doors shall be lockable and utilize stainless steel hinges and locks. A safety glass, lockable control panel viewing window shall be provided which allows limited access to the genset controls without opening the enclosure doors. An Emergency push button shall be mounted on the exterior of the enclosure. Coolant and oil drains shall be piped to the edge of the genset baseframe where they shall be terminated with a capped NPT pipe fitting accessible form the exterior of the enclosure. The Industrial grade exhaust system shall be internally mounted to prevent rusting. The circuit breaker and control panel shall be mounted on the right hand side of the enclosure and shall be located to allow easy access to control and power wiring.

2.2 AUTOMATIC TRANSFER SWITCH

An Automatic Transfer Switches shall be provided and installed complete in every respect so that upon failure of the normal source of power from the electrical utility, a separate local source of power shall automatically be provided to the power distribution systems. The contractor shall furnish, install and connect the automatic transfer switches complete as hereinafter specified. The Automatic Transfer Switch shall conform to the standards set forth in UL 1008.

A. Automatic transfer switch shall be mechanically held, enclosed type, three phase, 3-pole, rated continuous amperes as noted in enclosure for all AC loads at 600 volts. The transfer switch shall be complete with adjustable pneumatic relays; on engine start - 0.5-3 seconds; on transfer to emergency - 1-300 seconds; neutral position between transfer - 0.5-5 seconds; on retransfer to normal - 1-300 seconds; and on engine cool down - 0-10 minutes (set for 5 minutes). Provide auxiliary contacts and accessories required to completely coordinate the automatic transfer of power from normal to emergency and back to normal for the engine generator set and test switch.

B. The transfer switch shall be rated for both inductive and resistive loads. All electrical coils shall be designed for continuous operation regardless of their normal duty cycle. A mechanical and electrical interlock system shall be provided to prevent both the normal power source and the emergency generator from being connected together. Voltage sensitive devices shall be provided to monitor the normal power source and signal the emergency generator to start, on a partial or complete loss of power on any phase. These shall be adjustable for any value from 70% to 100% of the normal power source voltage, and temperature compensated for a maximum deviation of ±2 volts, from -50 to +150 F. Simulated power failure test switch shall be provided to test the complete operation of engine generator and transfer switch.

C. The transfer switch shall have dual electrical operators and all busses shall be copper. The switch shall be equipped with a manual operator. The manual operator shall provide the same contact to contact transfer speed as the electrical operator to prevent a flashover from switching the main contacts slowly. The transfer switch shall have to withstand capability equal to the interrupting rating of the overcurrent device protecting the feeders.

C. Automatic Transfer Switch manufacturers shall be Russell Electric, ASCO or equal.

2.3 WIRING TEMPERATURE RATING

Products specified here shall be UL listed for connection to conductors rated 75 C, or higher.

PART 3 EXECUTION

3.1 TESTING

Prior to acceptance of the installation, the generator shall be subjected to a four (4) hour test. This test shall be performed at the job site in the presence of the Owner. It shall include one hour at 50% load, one hour at 75% load, and one hour at 100% load . Upon completion of the four hour load test, the generator shall be shut-down after the cooling period. The generator shall be started and immediately upon reaching rated rpm, 100% load shall be applied to demonstrate one step full load capability. The capability of the system to pick up full standby service load within 10 seconds of power outage shall also be demonstrated. After testing is complete:

A. A full tank of fuel shall be provided, replacing any fuel used for testing (N/A for natural gas). Diesel fuel shall be treated with an alcohol-free additive to disperse water and clean injectors.

B. A copy of the generator' s load test report shall be sent to the engineer of record and the Owner.

3.2 FINAL ACCEPTANCE

The installation shall be supervised, checked and tested by a qualified representative of the engine generator manufacturer. Written certification shall be sent to the Engineer and Owner prior to final acceptance.

3.3 DOCUMENTATION AND TRAINING

3.3.1 Documentation

Prior to final acceptance, the manufacturer shall supply three (3) copies of complete instruction manuals to the owner. The manuals shall include operation and maintenance procedures, complete parts lists, dimensional drawings, unit wiring diagrams and schematics, and interconnection wiring drawings.

3.3.2 Training

Prior to final acceptance, the manufacturer shall provide comprehensive training to the owner's designated personnel. Training shall cover, but not be limited to, operation, maintenance and troubleshooting of the equipment.

3.4 WARRANTY

The emergency generator, transfer switch and associated equipment shall be warranted by the manufacturer for a period of five (5) years, from the date of final inspection and acceptance. The warranty shall be included in the contract document. The warranty shall include all parts, labor (including travel), expenses and equipment necessary to perform replacement and/or repairs.

-End of Section-

DETAILED SPECIFICATIONS

SECTION 7: RADIO TELEMETRY MONITOR AND CONTROL SYSTEM

PART 1 - GENERAL SPECIFICATION

1.1 SYSTEM DESCRIPTION

A. A fully integrated Radio Telemetry Monitor and Control System (MACS) as manufactured by Dexter Fortson Associates, Inc. and represented by K.L. Shane, Inc., 919-833-6343 is installed and operating in Franklin County. This system monitors elevated tank levels, meter vaults, water booster pump stations, treatment plant processes, and sewage lift stations, and provides the Owner with automated feedback control, alarms as they occur, and information and reports specific to the Owner's needs.

All future projects shall require RTUs to be furnished and installed to provide information to Franklin County Utilities and shall be fully compatible and interchangeable with the existing Dexter Fortson Associates, Inc. SCC and RTUs already installed and operating. A Radio Path Survey shall be conducted prior to final design and prior to final construction to ensure proper functioning of each new RTU and to establish required antenna heights for each site. The design Engineer for each new project shall coordinate with K.L. Shane, Inc., P.O. Box 385, Garner, North Carolina 27529, Telephone No. 919-833-6343, Fax No. 919-833-6449 during design to ensure all requirements for a complete and operating telemetry system is furnished. The main system controller (SCC) is located in the offices of Franklin County Utilities in downtown Franklinton, North Carolina.

Any modifications to the Central Computer required by the addition of any RTU to the system shall be included in the cost of the RTU and borne by the Owner of the project.

Concurrent operations of distributed intelligence shall occur at system, area, site, and unit level of the local area network via interrupt driven, multi-tasking functionality at all levels. Configuration of the system enables one to many devices, discrete input/output translation, process control, store and forward repeating, and links to local area network (LAN) units at any level. The system message traffic shall be managed to provide maximum functionality and minimize redundant operations and data. Critical variables such as slew rates, damping, and dead bands shall be implemented at the site level and be accessible only by the system engineer. The system furnished shall have the capability of downloading and restarting programs via telephone modem including the downloading of programs via the radio network to site RTUs.

B. The system supplier shall be a licensed Electrical Contractor in the State of North Carolina with an Unlimitted Classification and have complete responsibility for the telemetry system, software interface, software configuration and functionality, hardware integration, field installation, commissioning, instrumentation calibration, wiring and related control functions.

1. The system supplier shall provide warranty, training, and field services as needed.

C. The system supplier shall be responsible for obtaining all required radio licenses and the preparation of the studies, both propagation and/or topographic, to determine the optimum radio transmission communications path.

D. If the Radio Telemetry Monitor and Control System does not meet the minimum performance standards specified herein as judged by the Engineer and the Owner , the System Contractor shall be required to replace the telemetry system with a system as specified herein and do so promptly and at no cost to the Owner. The Radio Telemetry Monitor and Control System shall be by Dexter Fortson Associates, Inc. of Birmingham, Alabama, as represented by K.L. Shane, Inc. of Raleigh, North Carolina., 919-833-6443.

E. The RTU manufacturer shall be an Underwriters Laboratory (UL) 508A approved shop.

F. The communications protocol shall be non-proprietary with store-and-forward capability. The protocol shall be readily available for evaluation by interested parties.

G. The following significant items are to be furnished and installed complete in every detail:

1. Remote Terminal Units (RTUs) with radio equipment, spare parts, and training.

2. Interface sensors and relays not furnished by others.

H. The system shall have the capability of performing the following functions:

1. Monitor and control system parameters such as tank or reservoir levels.

2. Monitor and control system equipment such as pumps and valves.

3. Monitor pressure, differential pressure, temperature, metering, and peripheral sensors both analog and digital.

4. Process digital values, ON/OFF, and HIGH/LOW.

5. Process analog values and set points – HIGH-HIGH, HIGH-LOW, LOW-HIGH, LOW-LOW.

6. Process metering, count, rate, corrected/uncorrected as appropriate.

7. Provide an operator interface with system.

8. Provide records of appropriate system transactions.

I. The system provided shall allow full redundancy with the ability to switch to manual operation as the system existed before automation.

J. The communications strategy used by the Telemetry System shall contain error checking, positive identification of all transmissions, and report by exception. The operator controlled System Control Computer (SCC) shall have adjustable polling times from 5 seconds to

24 hours, independently by site and incremented from the last confirmed message. The system shall incorporate reporting of changes and alarms as they occur, time stamped data logging, and alarm logging.

K. All telemetry devices shall auto start on energizing and resolve the system, area, site, and unit control algorithms on an interrupt driven multitasking basis at all levels.

1.2 LICENSING

A. An application must be submitted to the Federal Communications Commission (FCC) in the name of the system Owner and a Radio Frequency License issued to the Owner for the operation of VHF or UHF radio data frequency as appropriate.

B. Each site must be surveyed to establish the function, latitude, longitude, and elevation. The resultant Radio Frequency License prescribes the compliance requirements for the radio frequency assigned with regard to the following criteria:

1. Radio power output rated in watts.

2. Effective radiated power.

3. Required height of the antenna above ground level.

C. State and/or local licenses must be obtained where required.

1.3 QUALITY ASSURANCE

A. The system supplier of the telemetry system must present to the Owner a listing of systems that are currently in operation and are composed of the same base station hardware, software, and remote location equipment being offered for the contract. The system supplier must demonstrate to the satisfaction of the Owner that the similar existing systems meet the functionality, technical correctness, durability, flexibility, and the aesthetic expectations of the Owner.

B. The system supplier must accomplish an on-site Radio Path Survey to assure sufficient field strength for reliable radio communications if deemed necessary by system supplier.

C. The system supplier shall have the capability of accomplishing Radio Path Surveys and complying with FCC radio tuning requirements using an IFR-1200 instrument or equal.

D. Interface protection schemes will be an integral part of the system including but not limited to the following measures:

1. All hardwired interconnected panels and devices within a facility will be grounded with a minimum of one #6 bare copper conductor attached with copper, bronze, or stainless steel high quality connectors.

2. All antenna masts will be provided with a separate copper clad ground rod not less than eight feet (8') in length and bonded to the existing grounding system.

3. All structures provided, such as antenna masts and antennas, will be positioned not less than eight feet from bare high voltage conductors.

4. Pressure transducer access to water systems will be installed by the Owner and the Owner will provide suitable freeze protection for all devices, unless otherwise specified.

5. Coaxial lightning arresters (500 volts to 2000 volts) shall be provided for all radio installations.

6. All RTUs shall be equipped with Line, Input and Output interface boards that provide surge protection through suitable MOVs, dry contacts and/or optical isolation devices.

1.4 POWER REQUIREMENT

A. The Owner or others shall provide 120 volts, 15-amp AC electric power to all sites except where solar power is specifically indicated.

B. Electronic systems shall operate on 12 to 24 volts DC.

C. Personal Computers (PCs) shall, if furnished, include 725-VA (minimum) uninterruptible power supplies (UPS).

D. Remote Terminal Units (RTUs) shall be supplied with a 12 to 24-hour battery backup power, and in no case shall the battery be rated less than 10 ampere-hours.

1.5 TRAINING

A. A training program for the Owner's personnel shall be included. The approach to system training shall be designed to accomplish two basic objectives.

1. To teach the Owner's personnel the operation and philosophy of the equipment so they have a firm understanding of the configuration and operation of the system.

2. To instruct the Owner's personnel in the use of the various maintenance aids and equipment available to isolate and correct each circuit malfunction in the minimum possible time.

B. A minimum of eight (8) hours training shall be provided on the "Telemetry System Operation and Maintenance" and shall be scheduled with the Owner or Owner's representative.

1.6 SYSTEM SUPPORT

A. Unlimited telephone support shall be provided for a period of one (1) year at no additional cost to the Owner.

B. Replacement parts shall be shipped within 24 hours of request.

C. A telephone modem and remote access software shall be an integral part of the system supplied to enhance software support.

1.7 SYSTEM MAINTENANCE

A. The system supplier and their local representative shall maintain on-call qualified field service electricians and electronic technicians to assist with system maintenance.

B. In the event emergency repairs are required, the system supplier or their local representative shall have a system trained and qualified technician on the Owner's premises within a maximum of 24 hours.

C. After a three-month period of operation, the Owner will provide first level maintenance such as changing fuses, board swapping, checking batteries, and checking voltages, in accordance with the operations and maintenance manual provided by the system supplier.

D. Provide for a block of 20 hours of programming assistance and on-site field service during the first year of operation. Provide one (1) AFLS RF RTU Repair Kit.

1.8 WARRANTY

A. A one (1) year warranty shall be provided for the system. This warranty shall cover all materials, labor and system operation. After a three-month period of operation and training, subsequent field service will be provided only in excess of first echelon maintenance, which is to be performed by the Owner.

B. The Owner should maintain appropriate insurance to cover damage to system components due to vandalism, misuse, the environment, or acts of others.

1.9 SUBMITTALS

A. The system supplier shall provide the following submittal information to the Owner.

1. References of similar completed projects with the Owner's name and current telephone number.
2. FCC application for Radio Frequency License.
3. Overview drawing.
4. System diagram.
5. Significant item cut sheets.

6. Interconnect diagrams.
7. Specific spare parts listing for proposed RTU or RTUs.
8. Detail of the communications protocol.
9. Warranty document.
10. Schedule of events.

1.10 OPERATION AND MAINTENANCE MANUALS

Operation and Maintenance (O&M) Manuals shall be provided within two (2) weeks of start-up of the system and shall include red-line as-built drawings for use by the Utility.

PART 2 - DETAIL SPECIFICATION

2.1 REMOTE TERMINAL UNITS (RTUs)

A. RTUs serve to manage a group of remote sites in a total telemetry system and replicate a portion of the system control algorithm that resides in the system control computer (SCC). The area control algorithm and the assignment of the related remote sites allow the area controller to function independently of the system control computer (i.e., stand-alone mode and to continue functioning in the event of system controller or SCC failure).

B. All RTUs shall incorporate programming modifications or additions via the local Wide Area Network (WAN) without the need of on-site programming by a technician or locally connected programming equipment.

C. All RTUs shall have peer-to-peer communication configuration and multi-protocol recognition. Some industry protocols are DNP3, TCP/IP, Profibus, Data 2179, Modbus® RTU, or Modbus® ASCII.

D. All RTU discrete channels shall be reporting, non-reporting, inverse, or assigned to process control.

E. All RTUs shall be capable of being networked by radio, direct line, telephone, cellular, fiber optics, or internet.

F. The RTU shall incorporate the following equipment as standard.

1. An 8 X 40 LCD screen and 20 pushbutton keypad for operator interface. The screen and keypad shall be mounted to an integral hinged panel with a screw type thumb latch, and allow full access to the RTU components.

2. The portion of the system control algorithm that may reside in the RTU shall reside in EEPROM memory form and shall be non-volatile on power shutdown.

3. The EEPROM memory shall be capable of being modified, expanded, or reconfigured through the use of the wide area radio network (WAN), a telephone modem, or a serial connection to a laptop computer.

4. Two (2) RS232 serial ports expandable to four (4) serial ports.

G. All RTUs shall have the following common characteristics:

1. Microprocessor based, interrupt driven and multi-tasking.

2. Have a unique two (2) part identification address; the address shall be digital utilizing the hexadecimal numbering system and occupy a minimum of two (2) bytes of memory.

3. Capable of route store-and-forward repeating of remote location data and information.

4. Capable of serving as local area or process controller.

5. Capable of executing system control computer (SCC) commands.

6. Capable of monitoring and controlling site functions and status.

7. Capable of processing digital/analog inputs and processing digital/analog outputs.

8. Capable of utilizing Intel data formats.

9. Have multiple on-board counters for totalization.

10. Operate on a 12-volt battery backup.

11. Operate on nominal input power 105-135 volts 60 Hz.

12. Report alarms as they occur in a "report by exception" format.

13. Incorporate over-voltage protection on all inputs/outputs connections, supply power connections, and antenna connections.

14. Capable of being solar powered.

15. Capable of supporting synthesized voice dialer with 24 voice alarm messages.

H. All RTUs shall have the ability to provide the following features:

1. Differential Pressure Calculations

2. Square Root & Absolute Value Functions

3. Flow Rate & Totalization Calculations

4. 32 Bit Signed Math Capability

5. AND, NAND, OR, NOR

6. XOR, XNOR, INVERT

7. Pump Alternator

8. Level Controller

9. High Speed Counters

10. Pump Runtime & Cycle Counters

11. High / Low Alarm Indicators

12. Data Logging (93 hours)

13. Microprocessor Watchdog

14. Multi-tasking Operating System

15. 32kB RAM, 32kB ROM

16. 16 bit 8 MHz Processor

17. Operator Keypad Access

18. 8 x 40 LCD Screen

I. Pump runtimes originating at the RTU are terminated to the digital input channels and are counted to the nearest second. Runtimes originating within the Control PC are to the nearest minute. The RTU shall accommodate runtime calculations to one-second accuracy.

J. The RTU shall be housed in single metallic enclosure that encompasses the electronics, battery, and transceiver and shall consist of the following standard features:

1. The enclosure shall conform to NEMA industry standard Type 4 with 16 gauge steel bodies and 14 gauge steel doors.

2. The finish shall be ANSI 61 gray polyester powder coating inside and out over phosphatized surfaces for outdoor applications. The equipment mounting panels shall be white enamel.

3. Seams shall be continuously welded and ground smooth.

4. The enclosure shall have four (4) external mounting feet.

5. There shall be a rolled lip around three (3) sides of the door and all sides of the enclosure.

6. An oil-resistant door gasket attached with oil-resistant adhesive and held in place with steel retaining strips shall be provided.

7. The door shall be attached with a continuous steel hinge and a stainless steel hinge pin.

8. The enclosure shall have an integral hasp and staple provided for padlocking.

9. RTU supplied with LCD and keypad operator interface shall include stainless steel pad lockable handles which include 3-point latching hardware.

10. The enclosure shall be sized appropriately for equipment, environment, installation, and provide for adequate maintenance access.

K. RTU general requirements are established in the interest of function, durability, flexibility, cost effectiveness, and standardization for operations and maintenance.

L. The RTU electrical parameters shall conform to the following minimum standards.

1. The alternating current source shall be rated at 120 volts, 60 hertz and the power consumption shall be rated at 60 watts.

2. The direct current source shall be rated at 12 to 24 volts, and the power consumption shall be rated at 30 watts.

3. Battery power 10 ampere-hour (AH), 12 hour rating for a (5-25 watt radio) or 24-hour for a (2-5 watt radio), 30 AH for solar and repeater options.

4. Any solar panels required shall be rated for a minimum of 3 to 6 amp at 20 volts - bright sun.

M. The RTU input parameters shall conform to the following minimum standards.

1. All RTUs shall incorporate a minimum of eight (8) analog inputs with the following characteristics, 8 or 10 bit, 4-20 ma/0-5 vdc/1-5 vdc.

2. All RTUs shall incorporate a minimum of eight (8) digital inputs with the following characteristics, ON/OFF, 12vdc, 24vdc, 120vac, dry contacts, isolated.

3. The RTUs shall incorporate a minimum of four (4) counters with the following characteristics, 16 bit or 32 bit, ON/OFF, isolated.

N. The RTU output parameters shall have the following minimum standards.

1. The RTUs shall incorporate a minimum of one (1) analog output with the following characteristics, 4-20 ma, 0-5 vdc.

2. The RTUs shall incorporate a minimum of eight (8) digital outputs with the following characteristics, On/Off, 120VAC @ 5 amp resistive dry contacts.

O. RTU input/output (I/O) requirements are established as a function of site specific equipment and sensors to be monitored and/or controlled. The Input/Output (I/O) quantity may vary by site with the minimum requirement established in the table below. Additional I/O will be required to provide the Owner with up to 20% spare I/O capacity.

RTU Input/Output Capability

I/O Diversity	Medium	
I/O Flexibility	Variable	
I/O Channels	29	
Analog Inputs	8	Expandable to 16 Analog Inputs
Digital Inputs	8	Expandable to 64 Digital Inputs
Counter Inputs	4	Expandable to 56 Counter Inputs
Analog Outputs	1	Expandable to 16 Analog Outputs
Digital Outputs	8	Expandable to 64 Digital Outputs

P. All RTUs shall be designed to operate in an ambient temperature environment ranging from -20°C to +60°C and within a relative humidity range from 5 to 95 percent non-condensing.

Q. For local control functions, the RTU shall rely on the system control computer or local Area Controller as required by the Owner application.

R. Each RTU shall be capable of being a "store-and-forward" repeater, communicating in a "peer-to-peer" configuration and include the option of route repeating strategy.

2.2 RADIO EQUIPMENT

A. Radio transceivers shall operate in half-duplex mode and meet the needs of the system. Each RTU shall have a radio transceiver meeting the requirements of the FCC Part 90 and can be tuned, aligned, and repaired at any competent two-way radio service center. All radios are single frequency and capable of be transferred between sites without reprogramming.

B. The RTU shall be capable of using any data radio that is commercially available for use on designated frequencies. The radio shall have a type-acceptance under FCC Part 90 for operation in the appropriate bandwidth (either narrow or wide band). All electrical connections to the radio shall be plug-in for ease of repair.

C. Transceivers that require custom programming or use protocol conversion routers to enable the store-and-forward capability of the RTU shall not be acceptable, and shall disqualify the entire system as an "or equal" for consideration.

D. The communications protocol shall be non-proprietary with store-and-forward capability. The protocol shall be readily available for evaluation by interested parties.

E. Radio antennas shall be omni or Yagi type antenna with gain as required by the field survey, and shall have the following characteristics:

1. The antennas shall be rated for 100 miles per hour wind speed.

2. Antennas shall be connected to radios with RG/8U low loss coaxial cable or appropriately sized helix cable.

3. Each antenna shall be mounted at a height above ground as determine by the field survey and be in compliance with FCC regulations.

4. Coaxial connection to the remote unit enclosure shall be by means of a coaxial type bulkhead lightning arrester rated at 1 kilowatt with a minimum of 500V and a maximum of 2000V breakdown voltage.

5. Antenna masts if required will be free standing, galvanized steel or aluminum.

F. Radio modems shall be provided as an interface between transceivers and the system control computer or RTUs. Radio modems shall be consistent with the system design and telemetry strategy including store and forward repeating.

G. Radio repeaters will be furnished selectively to insure reliability of the telemetry network where factors such as terrain feature or effective radiated power of the system does not provide a reliable communications path.

H. Dual frequency repeaters shall not be used.

2.3 SYSTEM INSTRUMENTATION

A. Enter specific specifications regarding the telemetry system instrumentation. Coordinate this information during design with the local Dexter Fortson Associates, Inc. representative, K.L. Shane, Inc., Telephone No. 919-833-6343.

<u>Example:</u>

1. Pressure transducers shall be rated for the applicable source pressure to be monitored and have repeatable accuracy range within plus or minus 0.5%. They shall be temperature compensated within a range of 30° F to 110° F. The response time shall two (2) milliseconds or less with a burst pressure rating three (3) times the full scale rating. Pressure transducer units supplied and installed at line, tank, and standpipe sites shall be either 0-250 or 0-100 psi range, suitable for the application. The Owner shall provide pressure point taps and freeze protection.

2. *Submergible pressure transducer units supplied and installed in raw water or finished water wet wells shall be of suitable range for the application, rated for a 3X burst pressure, provide 4-20 ma output, 10 to 32 volts, temperature compensated, and calibrated for each particular task.*

3. *Door entry switches shall be magnet-latching type, 12-vdc sourced.*

4. *Keyed entry switches shall be 12-vdc sourced and mounted in the RTUs base.*

5. *Meters shall be furnished by others to provide high-speed pulse volume and 4-20 ma rate outputs.*

6. *Open/Close valves shall open on command, fail closed, and provide open and close position contacts. Valves are furnished by system supplier.*

7. *Choke valves shall be commanded by analog set point, fail closed, and feedback analog position. Valves are furnished by system supplier.*

8. *Pump discharge valves shall be commanded unlocked to open by high pressure and fail closed by low pressure. Open and closed contacts are provided. Valves are furnished by system supplier.*

PART 3 - SYSTEM EXECUTION AND SITE SPECIFIC DATA

3.1 SYSTEM CONTROL ALGORITHM

A. To perform the control function, the system control algorithm shall reside in the system control computer and perform the task of an automatic supervisory controller as well as provide alarms and record historical and operational data.

B. Enter specific operations information. Coordinate with local Dexter Fortson Associates, Inc. representative, K.L. Shane, Inc., at 919-833-6343. How does the system work?

Example:

TANK CONTROL:

Cypress Tank *level will be monitored by a 0-100 psi pressure transducer installed with insulation and heat tape to prevent freezing. An RTU at the tank will continuously monitor the pressure transducer and will report changes in level exceeding 3 percent of the usable water level range to the SCC. The current level will also be displayed and recorded at the SCC by operator or timed polling (hourly) of the system. The tank level set points are described as follows:*

High Level Alarm set point	*Tank Overflow. Override all pumps OFF*
Low Level Alarm set point	*Tank Low. Turn ON peak demand pump.*
Site Alarms	*Power Fail, Communications Fail*

BOOSTER PUMP CONTROL:

Booster stations are configured with two (2) pumps. The pumps are labeled 1 and 2 and are designated as Primary = Pump 1, Standby = Pump 2. Interconnects on site will provide the operator control of the pumps at the SCC. Each booster station will have an overpressure switch provided and installed by the Owner. The Owner will provide the vendor control wiring diagrams for each station. It is the responsibility of the vendor to design and implement the necessary interface which will result in standardized SCC control of all stations.

Booster Pump Control at SCC - Operator Selectable from a List of 3 Options. Also includes an override control for each pump.

Option 1.	*All Pumps Automatic by Levels*
Option 2.	*Primary Pump = 1, then Standby Pump = 2*
Option 3.	*Primary Pump = 2, Standby Pump = 1*
Override Control	*Override Pump 1 ON or OFF*
Override Control	*Override Pump 2 ON or OFF*

Pump Control: Cypress Tank is the controlling tank level.

(Operator selection from multiple tank sites within system for pump control is an available option if communication paths are good. Example: Handover Tank level, Pilgrim Tank level or Ridge Rd. Tank level.)

All Pumps	*Overpressure set point – all pumps OFF, Tank High Level Alarm set point – all pumps override OFF, and Tank Low Level Alarm set points – peak demand pump ON.*
Primary Pump	*Level ON set point, Level OFF set point. Automatic control levels.*
Standby Pump	*Level ON set point, Level OFF set point. Automatic control levels.*
Pump Alarms	*Pump 1 Fail Alarm and Pump 2 Fail Alarm - pump issued ON and Auxiliary contacts are not close, Overpressure Alarm.*
Site Alarms	*Power Fail, Communications Fail*

Metering Data Acquisition:

A meter translator and pickup will display both flow total and flow rate and will be provided by DFA at each of the nine meter pits identified. The RTU provided at the meter pits will forward the flow rate and flow total for each hourly system poll.

Pressure Transducer Units:

Pressure transducer units supplied and installed at the tank sites will be 0 to 100 psi range, suitable for the application, rated for a 3X burst pressure, provide 4-20 ma output, 20 volts, temperature compensated, and

calibrated for each particular tank. Insulation and heat tape will be provided by the vendor to prevent freezing. Suitable fittings supplied and terminated by the vendor at an Owner furnished tap point in the altitude valve pit

3.2 RTU PLACEMENT AND INPUT/OUTPUT REQUIREMENTS

A. For each site in the telemetry system, list the physical location of each site and the RTU placement at the site, site name and Input/Output structure, alarms and other requirements for each site's RTU.

Example:

Remote Site Name: Ivy Creek Pump Station RTU # 1 – locate RTU within the PS building.

Latitude - ° ' " N

Longitude - ° ' " W

Elevation – _____approx.

Digital Inputs	*Digital Description*	*Function Explanation*
1	*Pump #1 Status*	*"Run / Stop" – Pump run times, cycle counts, fail alarms.*
2	*Pump #2 Status*	*Run / Stop" – Pump run times, cycle counts, fail alarms.*
3	*Pump #1 HOA Switch Status*	*Remote Switch Position Status "Not in Auto". Contacts supplied by Telemetry Contractor.*
4	*Pump #2 HOA Switch Status*	*Remote Switch Position Status "Not in Auto". Contacts supplied by Telemetry Contractor.*
5	*Phase Loss*	*Alarm – Auxiliary contacts Phase Loss Relay*
6	*Intrusion Alarm*	*"Status / Alarm" – Door Switch with Key Switch – Switches supplied by Telemetry Contractor.*
7		*Spare - Future addition*
8		*Spare - Future addition*

Digital Outputs	*Digital Description*	*Function Explanation*
1	*Pump #1 Control*	*Call to Run or Pump Start / Stop*
2	*Pump #2 Control*	*Call to Run or Pump Start / Stop*
3		*Spare - Future addition*
4		*Spare - Future addition*
5		*Spare - Future addition*
6		*Spare - Future addition*
7		*Spare - Future addition*
8		*Spare - Future addition*

Analog Inputs	*Analog Description*	*Function Explanation*
1	*Suction Pressure*	*Pressure transducer supplied by Telemetry Supplier.*
2	*Discharge Pressure*	*Pressure transducer supplied by Telemetry Supplier.*
3	*Flow Rate*	*Flow meter supplied by Telemetry Supplier.*
4		*Spare - Future addition*
5		*Spare - Future addition*
6		*Spare - Future addition*
7		*Spare - Future addition*
8		*Spare - Future addition*

Analog Output	*Analog Description*	*Function Explanation*
1		*Spare – Future addition*

Counter Input	*Counter Description*	*Function Explanation*
1	*Total Flow Rate*	*Electronic Meter Pickup supplied by Telemetry Supplier*
2		*Spare – Future addition*
3		*Spare – Future addition*
4		*Spare – Future addition*

B. Continue to list the RTUs and the Input/Output as above until all new site locations included in the project are complete.

C. All I/O lists must be approved by the Franklin County Utility Department in writing prior to Authorization to Construct being obtained.

3.3 SYSTEM SPECIFIC REQUIREMENTS

A. List any specific requirements needed or required. Coordinate with the Dexter Fortson Associates, Inc. local representative, K.L. Shane, Inc., Telephone No. 919-833-6343

Example:

Reports different and in addition to the individual site reports:

1. *List all tank levels at all five (5) remote sites in the system on one (1) report for ease of comparison.*

2. *List all flow rates for the three (3) remote sites and total flows for these sites on one report. Flow Rate and Total Flow for a specific site should be next to each other on the report.*

-- END OF SECTION –

REVISIONS			
SYM.	DESCRIPTION	DATE	BY

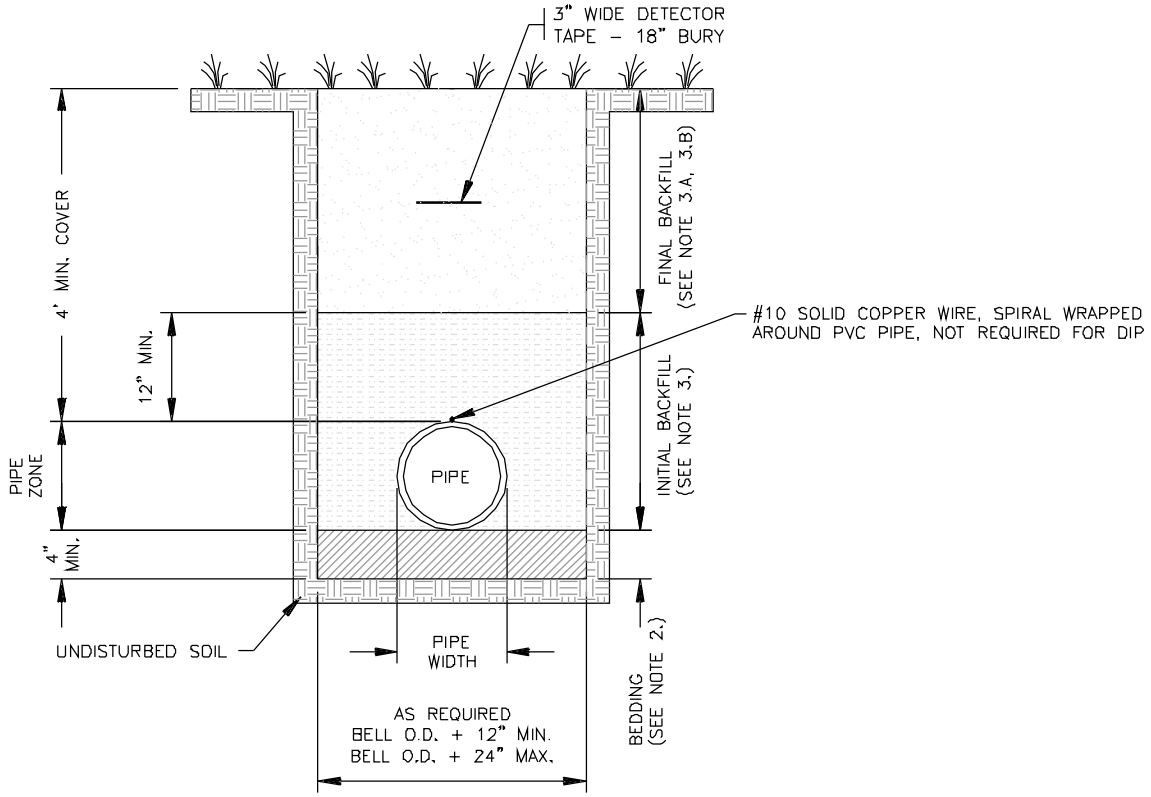

WATER MAIN TRENCH DETAILS
TYPE 3 LAYING CONDITIONS
N.T.S.

NOTES:

1. LAYING CONDITIONS AS PER AWWA C600 AND C605 STANDARDS.

2. BEDDING MATERIAL SHALL BE 4" MINIMUM THICKNESS, LOOSE SOIL (DEFINED AS NATIVE SOIL EXCAVATED FROM THE TRENCH), FREE FROM ROCKS AND SHALL PROVIDE UNIFORM SUPPORT FOR THE FULL LENGTH OF PIPE. COMPACT TO 95% MAXIMUM DENSITY.

3. INITIAL BACKFILL SHALL BE LIGHTLY CONSOLIDATED IN MAXIMUM 6" LOOSE LIFTS, COMPACTED TO 95% OF MAXIMUM DENSITY.

   A: UNDER AREAS TO BE SEEDED OR SODDED, COMPACT SUCCEEDING LAYERS OF FINAL BACKFILL IN 12" LOOSE LIFTS TO 85% MAXIMUM DENSITY.

   B: UNDER STRUCTURES, PAVEMENTS AND ROAD SHOULDERS, COMPACT SUCCEEDING LAYERS OF FINAL BACKFILL IN 6" LOOSE LIFTS TO 95% MAXIMUM DENSITY EXCEPT COMPACT TOP 12" OF SUBGRADE TO 98% MAXIMUM DENSITY.

4. PROVIDE #10 SOLID COPPER WIRE IN SUFFICIENT LENGTH TO BE SPIRAL WRAPPED AROUND EACH SEPARATE RUN OF ALL BURIED PVC PIPING. AT VALVE BOXES, BRING WIRE TO WITHIN 6 IN. OF TOP OF BOX AND INSERT INTO BOX THROUGH DRILLED HOLE. NOT REQUIRED FOR DUCTILE IRON PIPE.

5. INSTALL 3' WIDE DETECTOR TAPE AT 18" DEPTH. TAPE SHALL HAVE MIDDLE FOIL LAYER.

FRANKLIN COUNTY PUBLIC UTILITIES

DRAWING #	STANDARD WATER MAIN TRENCH DETAIL
W-1	

H:\AS\RV\H:\FCDSD\BOD\Water\W-01.dwg, LAYOUT: W-1, EDITED BY: RWebster 9-30-08 SCALE: 1"=1' (1:1)
XREFS: H:\FCDSD\BOD\BHALF11

REVISIONS			
SYM.	DESCRIPTION	DATE	BY

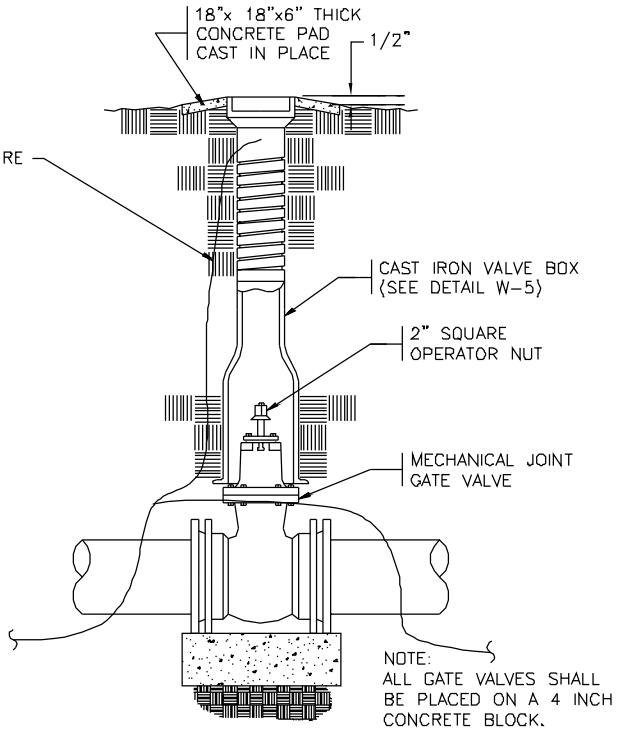

NOTES:

1.) INSTALL MARKER POSTS ON EDGE OF THE DOT R/W LINE.

2.) PROVIDE MARKER POSTS AT ALL LINE VALVES.

3.) ABBREVIATIONS STAMPED ON POST AS FOLLOWS:
MV = MAIN VALVE BO=BLOW OFF VALVE

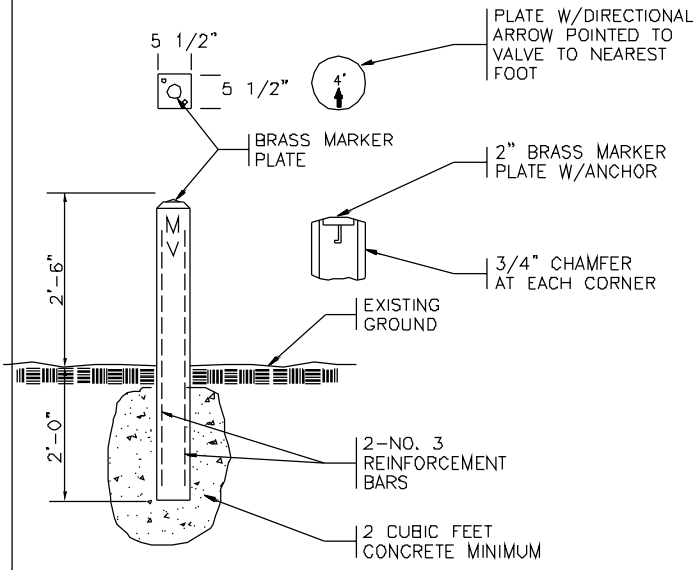

VALVE MARKER POST DETAIL

N.T.S.

NOTES:

1. PLACE GATE VALVES ON 4" CONCRETE BLOCK.

2. WHERE PVC PIPE IS BEING INSTALLED, 6 IN. OF COMPACTED #57 STONE MAY BE USED IN LIEU OF THE 4" CONCRETE BLOCK.

GATE VALVE ASSEMBLY

N.T.S.

NOTE:

1. BRING #10 SOLID COPPER WIRE TO WITHIN 6" OF TOP OF BOX AND INSERT INTO BOX THROUGH DRILLED HOLE.

FRANKLIN COUNTY PUBLIC UTILITIES

DRAWING #	
W-2	GATE VALVE ASSEMBLY

REVISIONS			
SYM.	DESCRIPTION	DATE	BY

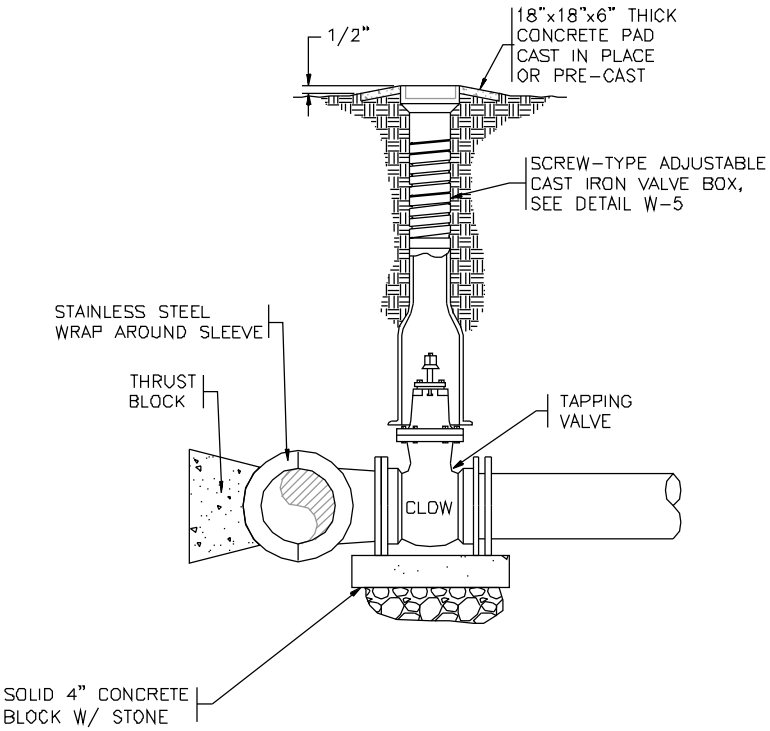

TAPPING SLEEVE AND VALVE ASSEMBLY
N.T.S.

NOTES
1) TAPPING SLEEVE SHALL BE STAINLESS STEEL WRAP-AROUND DTYPE AS MANUFACTURED BY FORD, MUELLER, OR ROMAC.
2) PLACE TAPPING VALVE ON 4" CONCRETE BLOCK. PLACE BLOCK ON 6" COMPACTED #57 STONE. BACKFILL AROUND SLEEVE AND VALVE WITH STONE TO TOP OF PIPE.
FULL CIRCLE SS BODY AS MANUFACTURED BY SMITH/BLAIR OR ROMAC

NOTES:

1.) INSTALL MARKER POSTS ON EDGE OF THE DOT R/W LINE.

2.) PROVIDE MARKER POSTS AT ALL LINE VALVES.

3.) ABBREVIATIONS STAMPED ON POST AS FOLLOWS:
MV = MAIN VALVE BO=BLOW OFF VALVE

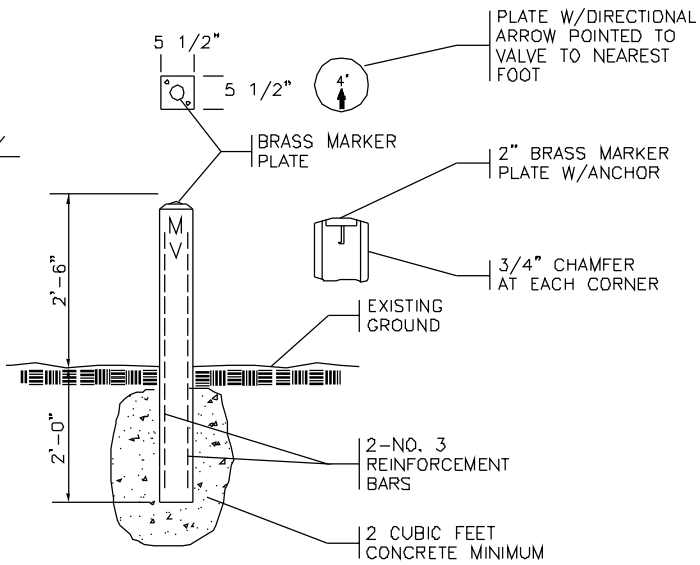

VALVE MARKER POST DETAIL
N.T.S.

FRANKLIN COUNTY PUBLIC UTILITIES

DRAWING #	TAPPING SLEEVE AND VALVE ASSEMBLY
W-3	

REVISIONS			
SYM.	DESCRIPTION	DATE	BY

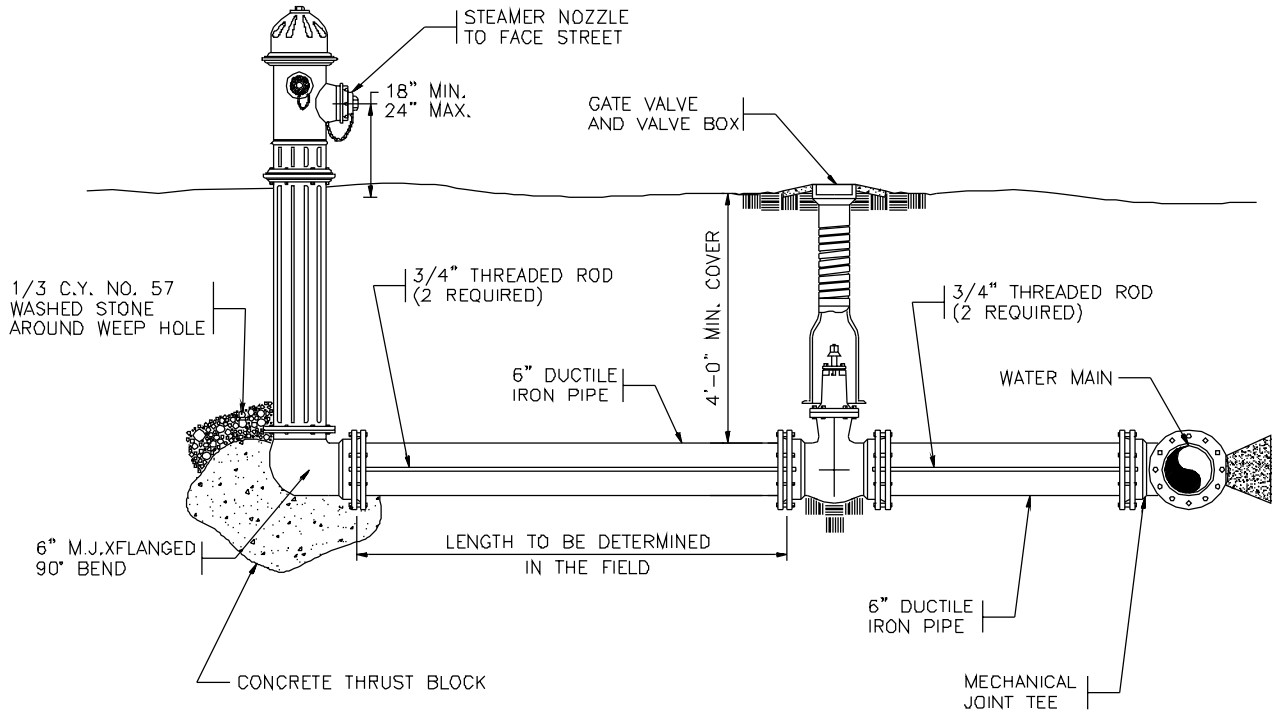

FIRE HYDRANT AND VALVE DETAIL

N.T.S.

NOTES:

1. ALL PIPE JOINTS SHALL BE MECHANICAL. MEGA-LUG RESTRAINTS MAY BE USED IN PLACE OF RODS.

2. PLACE HYDRANTS AT PROPERTY CORNERS AS DIRECTED BY FRANKLIN COUNTY.

3. ALL HYDRANTS SHALL RECEIVE 2 SHOP COATS AND 1 FIELD COAT OF OSHA SAFETY COLOR RED AS DESCRIBED IN AWWA C502.
ALL NOZZLE CAPS AND BONNETT SHALL BE PAINTED WHITE. PAINT SHALL BE HIGH-GLOSS ENAMEL.

4. FIRE HYDRANTS SHALL BE CLOW "MEDALLION".

5. APPLY 2 - COATS OF BITUMASTIC MATERIAL TO RODS OR PROVIDE GALVANIZED RODS.

FRANKLIN COUNTY PUBLIC UTILITIES

DRAWING #	STANDARD FIRE HYDRANT INSTALLATION DETAIL
W-4	

REVISIONS			
SYM.	DESCRIPTION	DATE	BY

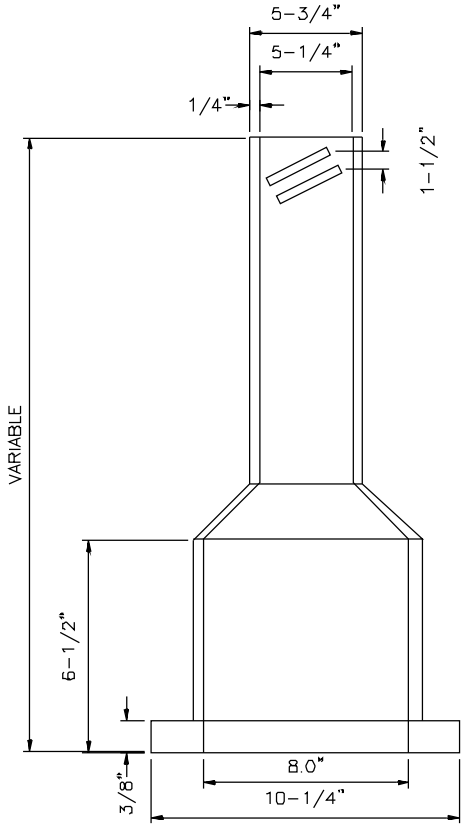

BOTTOM SECTION

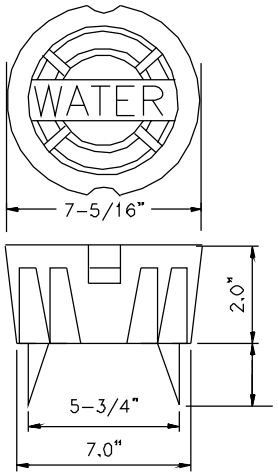

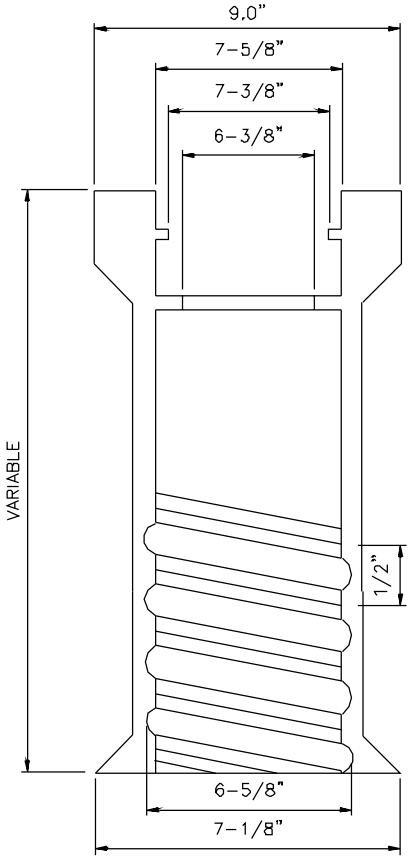

TOP SECTION

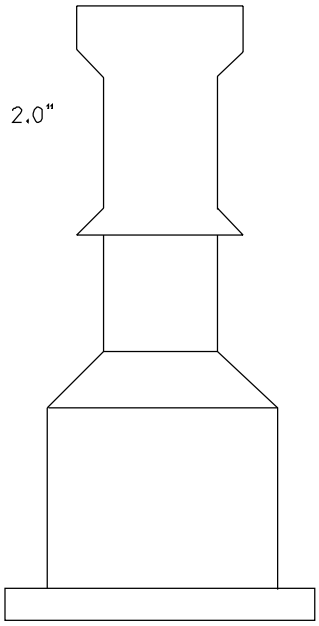

COMPLETE BOX

DIMENSIONS IN INCHES
LENGTH

TOP	BOTTOM
10	15
10	24
16	24
16	36
26	36
26	48
26	60

NOTES

1. VALVE BOX SHALL HAVE RAISED LETTERS "WATER" CAST INTO COVER.
2. VALVE BOX ACCOMMODATES 4" THRU 12" VALVES.
3. VALVE BOX SHALL HAVE $\frac{3}{8}$" HOLE DRILLED IN TOP SECTION THRU WHICH A $\frac{1}{4}$" X $1\frac{1}{2}$" GALVANIZED BOLT SHALL BE USED TO SECURE A 12GA. THHN TRACER WIRE FOR NON-FERROUS PIPE. A $\frac{1}{2}$" WASHER SHALL BE USED BETWEEN NUT AND INSIDE OF BOX. TIGHTEN HAND TIGHT.
4. SCREW TYPE VALVE BOXES ARE REQUIRED.
5. DIMENSIONS SHOWN ARE FOR INFORMATION ONLY AND VARY BASED UPON THE MANUFACTURER.

FRANKLIN COUNTY PUBLIC UTILITIES

DRAWING #	SCREW-TYPE VALVE BOX
W-5	

REVISIONS			
SYM.	DESCRIPTION	DATE	BY

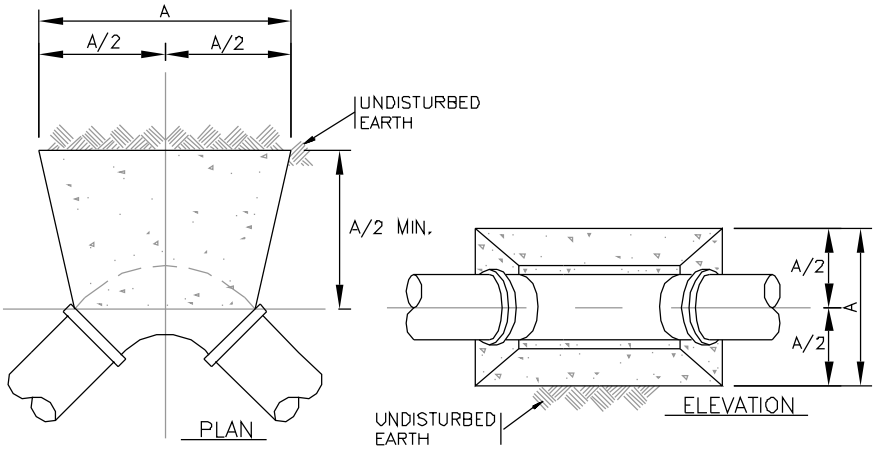

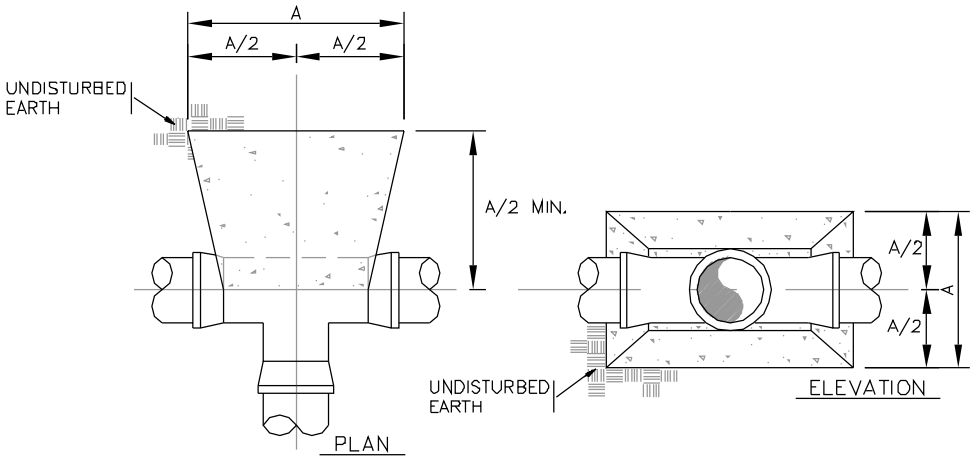

NOTES:

1. THRUST BLOCKS SHALL BE CONSTRUCTED OF 2500 P.S.I. CONCRETE
2. INSTALL TAR PAPER AROUND BEND OR FITTING TO PREVENT BONDING OF CONCRETE.
3. PRESSURE TEST AT 200 P.S.I.

DIMENSION A (FEET)									
BEND / FITTING	PIPE SIZE (NOM. DIA. IN INCHES)								
	4	6	8	10	12	16	18	20	24
90° BEND	1.4	2.0	2.7	3.4	4.0	5.4	6.0	6.7	8.0
45° BEND	1.0	1.5	2.0	2.5	3.0	4.0	4.5	5.0	5.9
22 1/2° BEND	0.8	1.1	1.5	1.8	2.2	2.9	3.2	3.6	4.3
11 1/4° BEND	0.5	0.8	1.0	1.3	1.5	2.0	2.3	2.5	3.0
TEE BRANCH/DEAD END	1.2	1.7	2.3	2.9	3.4	4.5	5.1	5.7	6.8

CONCRETE THRUST BLOCK DETAIL FOR
PRESSURE MAIN HORIZONTAL BENDS AND TEES

N.T.S.

FRANKLIN COUNTY PUBLIC UTILITIES

DRAWING #	CONCRETE THRUST BLOCKING
W-6	

REVISIONS			
SYM.	DESCRIPTION	DATE	BY

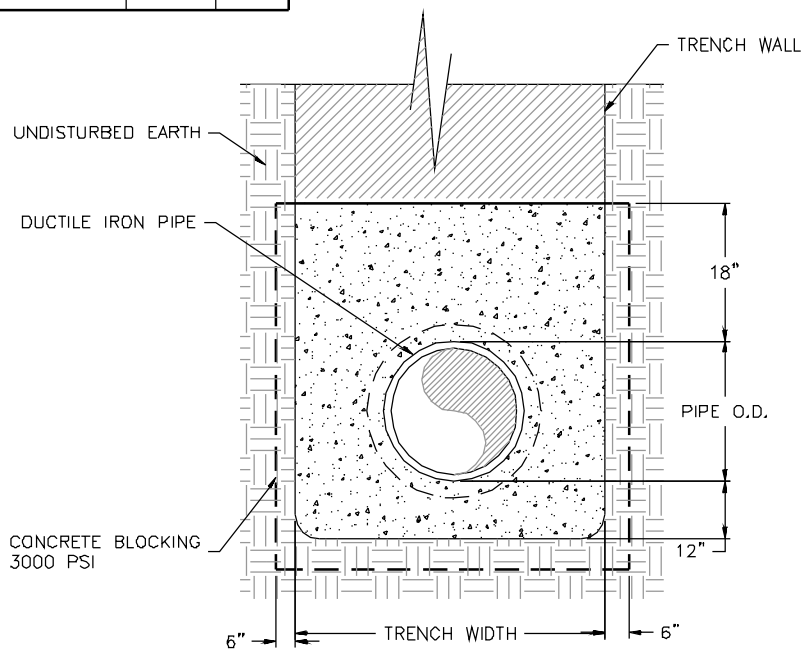

SECTION

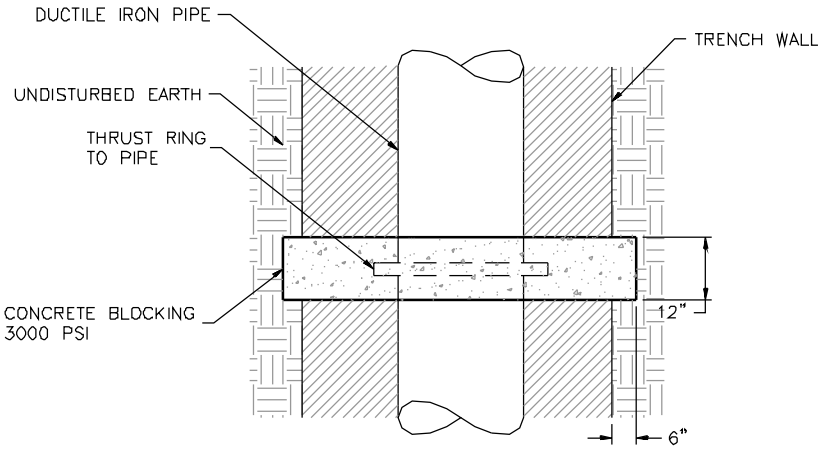

PLAN

THRUST COLLAR DETAIL
N.T.S.

FRANKLIN COUNTY PUBLIC UTILITIES	
DRAWING #	**THRUST COLLAR DETAIL**
W-7	

REVISIONS			
SYM.	DESCRIPTION	DATE	BY

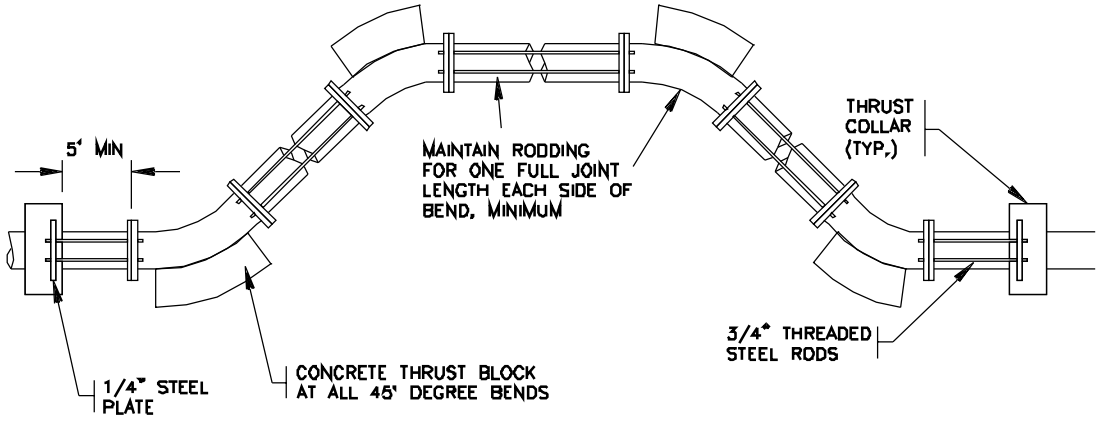

STATIC THRUST SIZE OF 45' BEND	NUMBER OF IN POUNDS	NUMBER OF RODS REQUIRED
6"	4,328	2
8"	7,694	2
12"	17,312	2
16"	30,779	4
20"	48,091	6
24"	69,252	8

NOTES:

1. ONCE INSTALLED AND TIGHT, THE STEEL RODS AND BOLTS SHALL BE COATED WITH 2 COATS OF BITUMINOUS BASE PAINT.
2. CONCRETE SHALL NOT CONTACT BOLTS OR ENDS OF MECHANICAL JOINT BENDS.

FRANKLIN COUNTY PUBLIC UTILITIES	
DRAWING #	VERTICAL BENDS
W-8	

REVISIONS			
SYM.	DESCRIPTION	DATE	BY

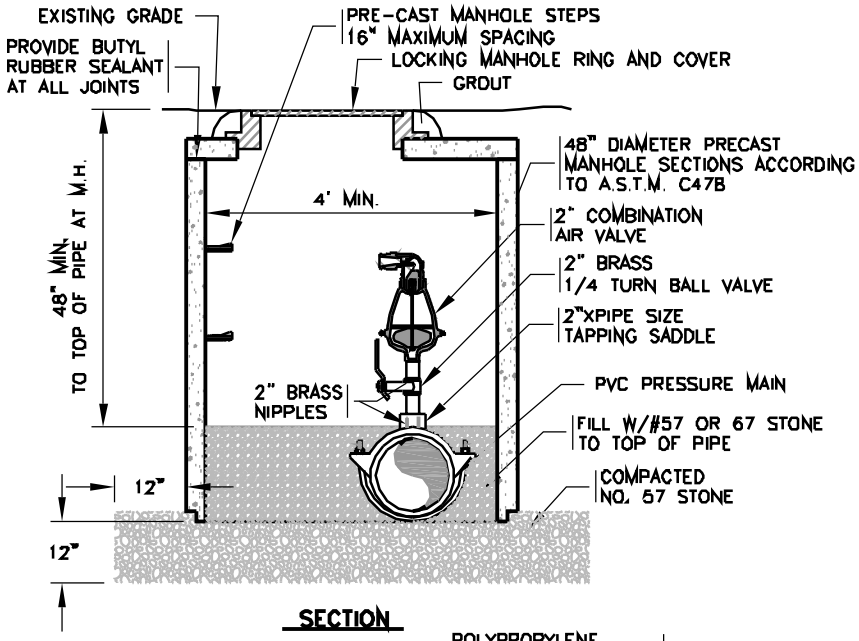

SECTION

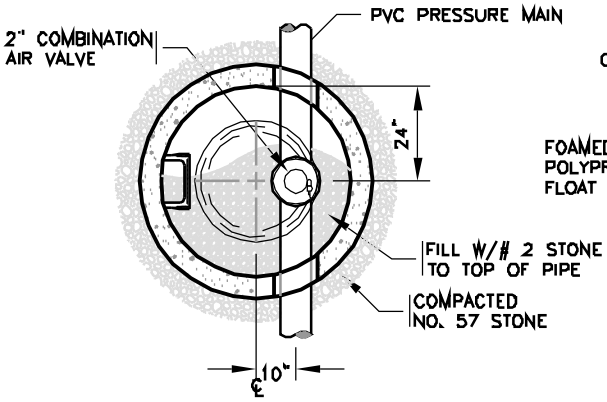

PLAN VIEW

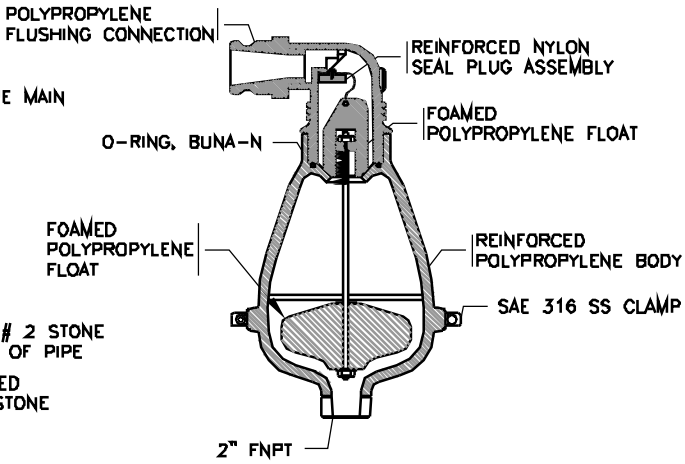

VALVE DETAILS

COMBINATION AIR RELIEF/ VACUUM RELIEF VALVE ASSEMBLY DETAILS
N.T.S.

FRANKLIN COUNTY PUBLIC UTILITIES	
DRAWING #	COMBINATION AIR/ VACUUM RELIEF VALVE ASSEMBLY DETAIL
W-9	

REVISIONS			
SYM.	DESCRIPTION	DATE	BY

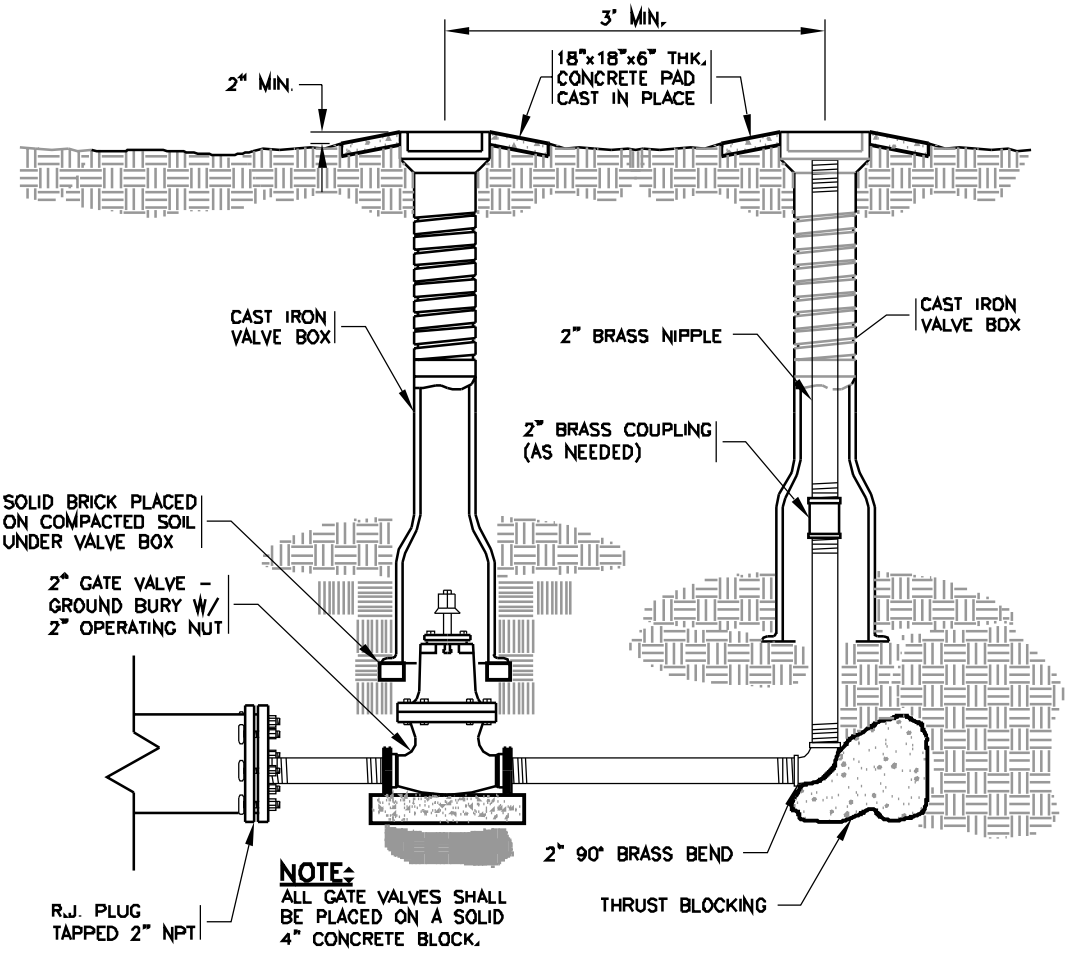

BLOWOFF ASSEMBLY AT END OF WATER MAIN
N.T.S.

FRANKLIN COUNTY PUBLIC UTILITIES	
DRAWING #	2" BLOWOFF ASSEMBLY (PERMANENT)
W-10	

REVISIONS			
SYM.	DESCRIPTION	DATE	BY

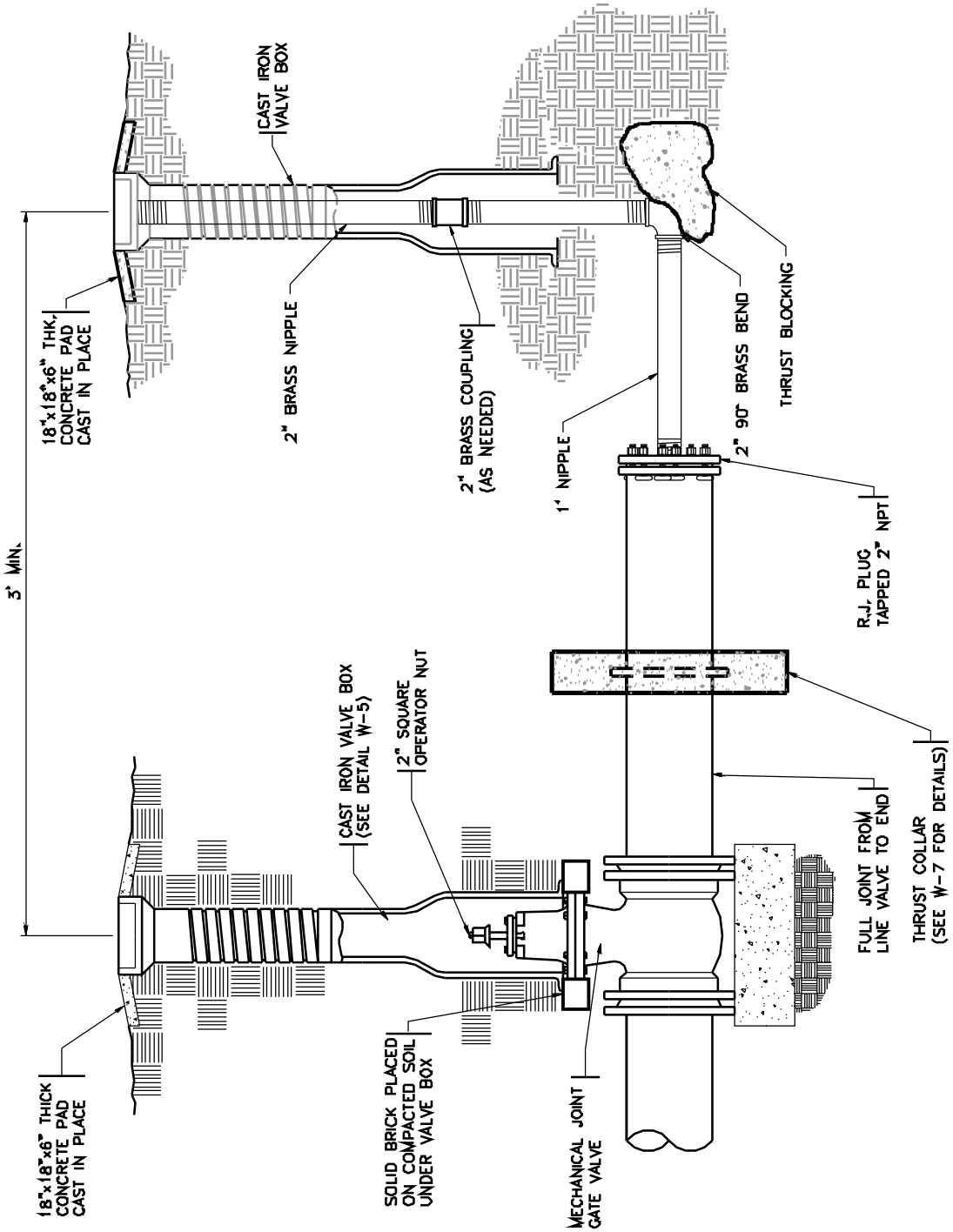

2" BLOWOFF ASSEMBLY AT END OF WATER MAIN

N.T.S.

NOTE:
1. ALL GATE VALVES SHALL BE PLACED ON A 4 INCH CONCRETE BLOCK.

FRANKLIN COUNTY PUBLIC UTILITIES	
DRAWING #	2" BLOWOFF ASSEMBLY (TEMPORARY)
W-11	

REVISIONS			
SYM.	DESCRIPTION	DATE	BY

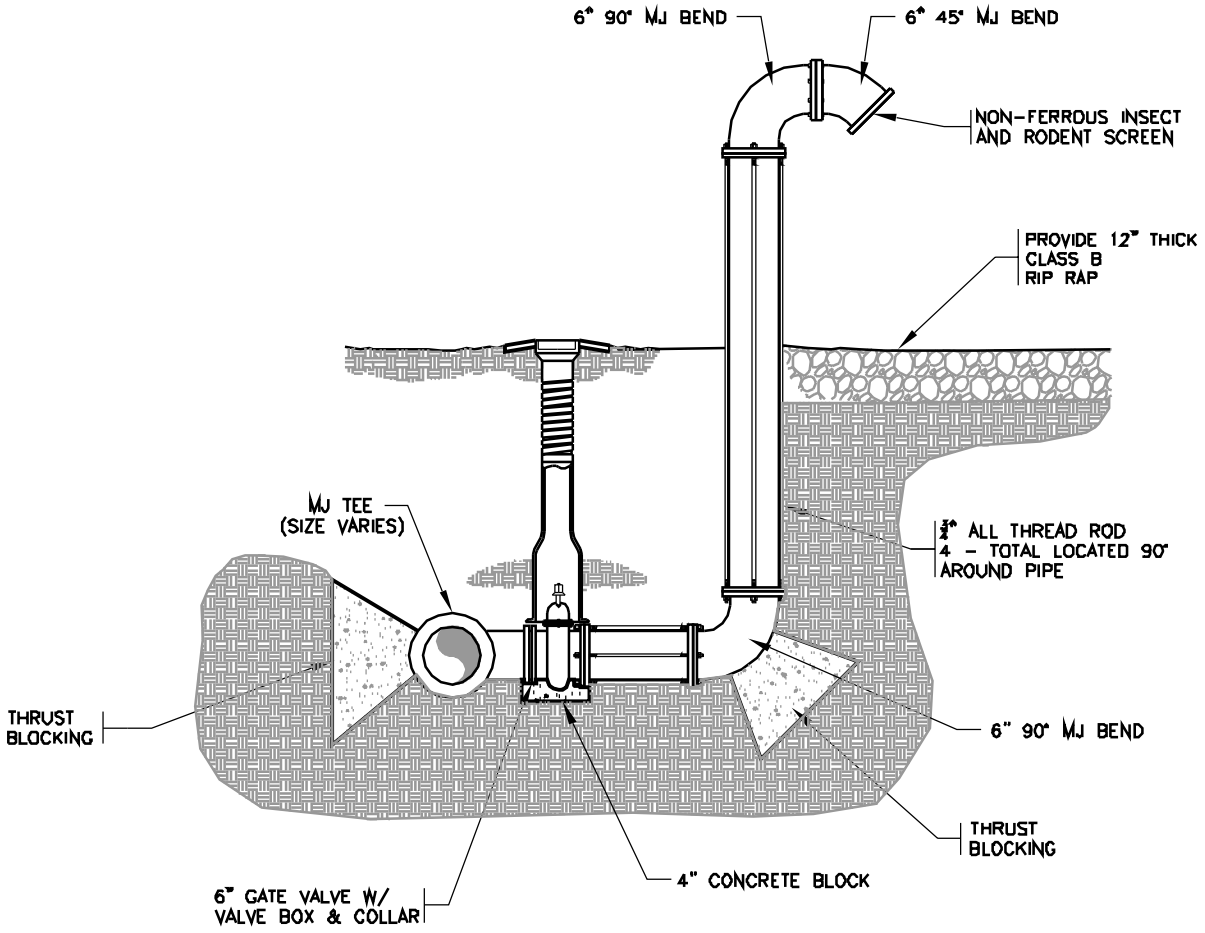

6" BLOWOFF ASSEMBLY
N.T.S.

FRANKLIN COUNTY PUBLIC UTILITIES	
DRAWING #	6" BLOWOFF ASSEMBLY
W-12	

REVISIONS			
SYM.	DESCRIPTION	DATE	BY

FORD CATALOG NO'S.	
5/8" x 3/4" COPPERSETTER	VHH72-12W-41-33G
1" COPPERSETTER	VHH74-12W-41-44G
3/4" CORPORATION STOP	FB1000-3G
1" CORPORATION STOP	FB1000-4G
SADDLE	STYLE 202B

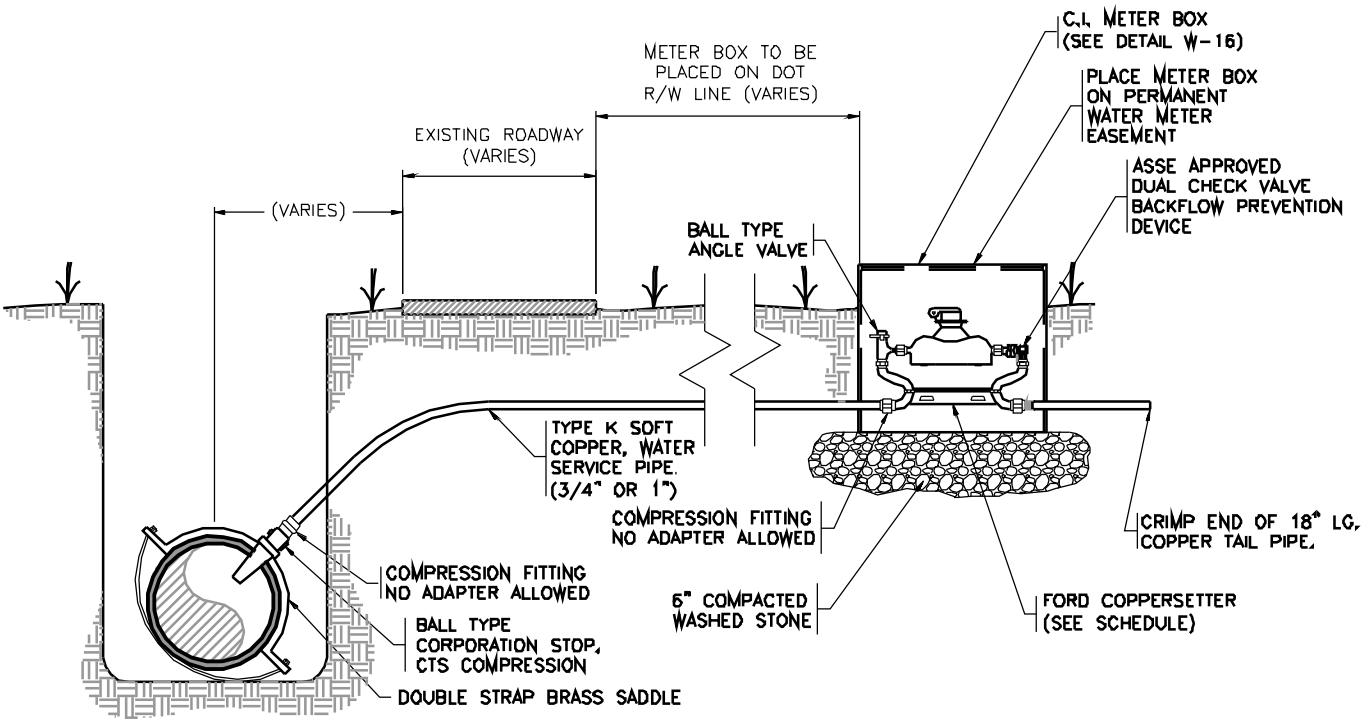

3/4" OR 1" TYPICAL RESIDENTIAL SERVICE CONNECTION

N.T.S.

NOTES:

1. DOUBLE STRAP BRASS SADDLE REQUIRED FOR PVC PIPE.
2. DUCTILE IRON PIPE MAY BE DIRECT TAPPED.
3. ALL FITTINGS CTS COMPRESSION TYPE.
4. METERS SHALL BE 3/4"-1" AMCO, NEPTUNE OR APPROVED EQUAL, REGISTRATION IN US GALLONS.

FRANKLIN COUNTY PUBLIC UTILITIES	
DRAWING #	3/4" OR 1" TYPICAL RESIDENTIAL SERVICE CONNECTION
W-13	

REVISIONS			
SYM.	DESCRIPTION	DATE	BY

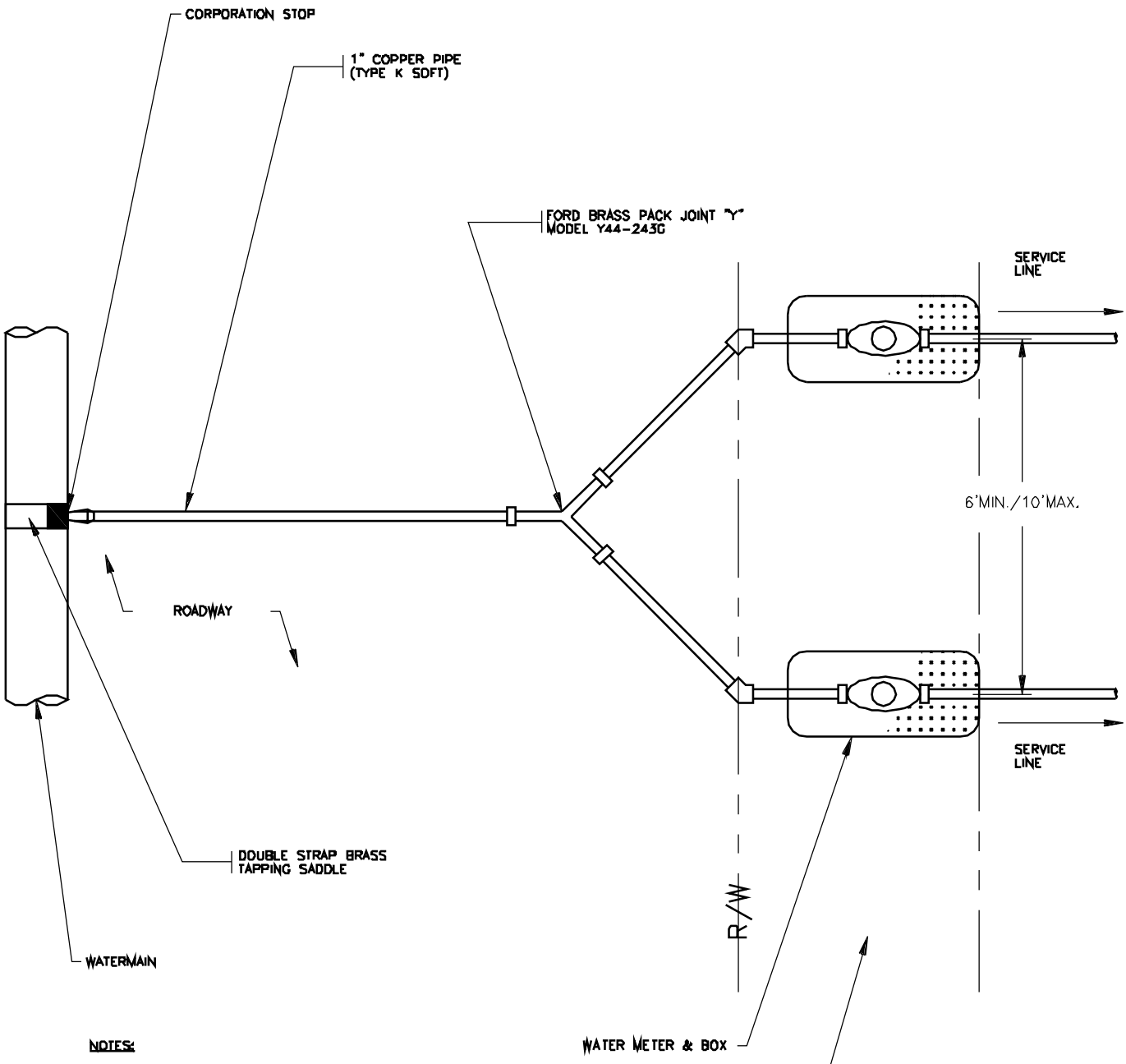

NOTES:

1) SEE DETAILS W-13 FOR RESIDENTIAL SERVICE REQUIREMENTS

2) SEE DETAIL W-16 FOR METER BOX REQUIREMENTS

PLAN VIEW

STANDARD MULTIPLE BRANCH SERVICES
N.T.S.

FRANKLIN COUNTY PUBLIC UTILITIES

DRAWING #	STANDARD MULTIPLE BRANCH SERVICES
W-14	

REVISIONS			
SYM.	DESCRIPTION	DATE	BY

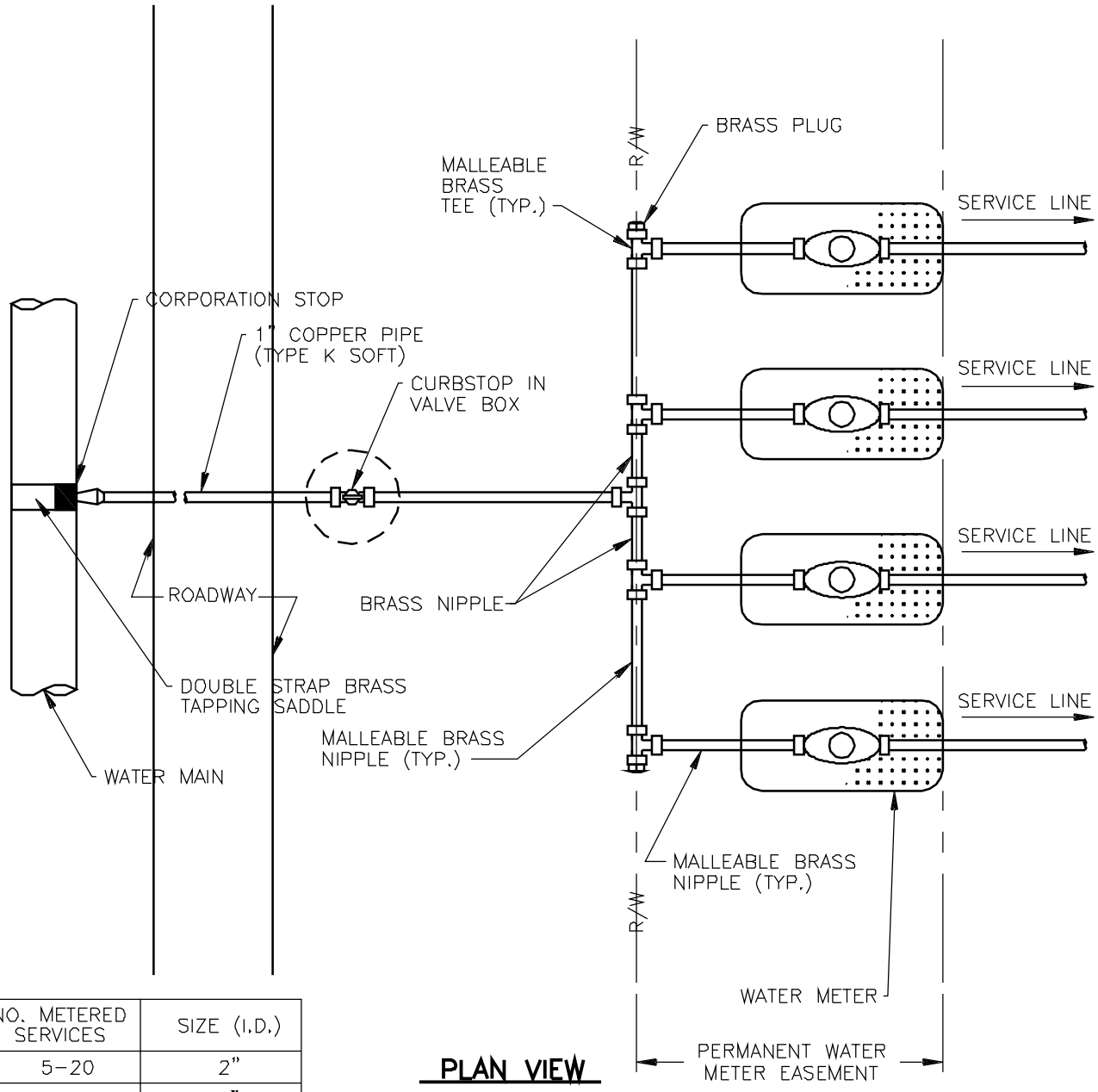

NO. METERED SERVICES	SIZE (I.D.)
5-20	2"
4	1"
2	3/4"

PLAN VIEW

STANDARD GANG METER ASSEMBLY

N.T.S.

NOTES:

1) SEE DETAILS W-13 FOR RESIDENTIAL SERVICE REQUIREMENTS

2) SEE DETAIL W-16 FOR METER BOX REQUIREMENTS

3) 2" WILL REQUIRE GATE VALVE

FRANKLIN COUNTY PUBLIC UTILITIES	
DRAWING #	
W-15	STANDARD GANG METER ASSEMBLY

REVISIONS			
SYM.	DESCRIPTION	DATE	BY

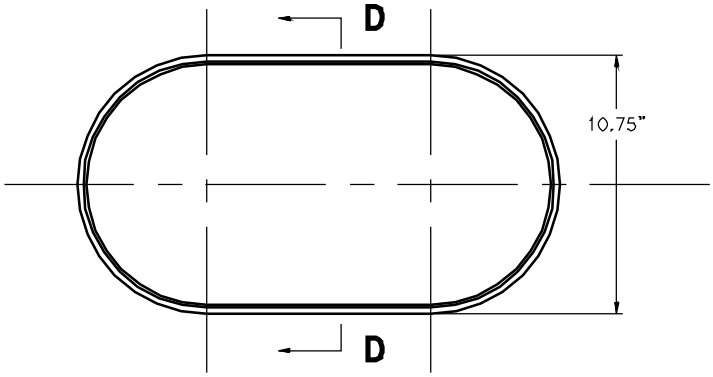

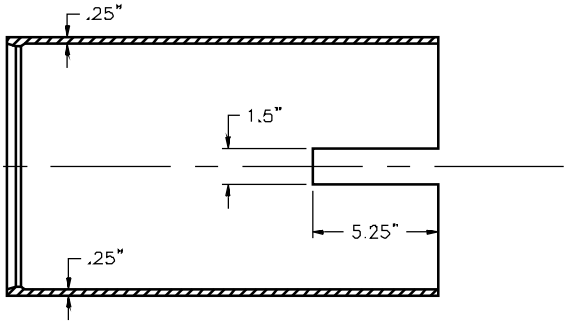

SECTION D–D

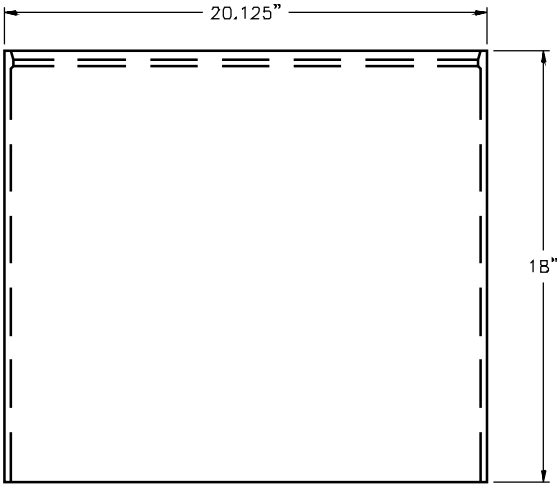

MIN. AVG. WGT.	
FRAME	50 LBS.
COVER	20 LBS.

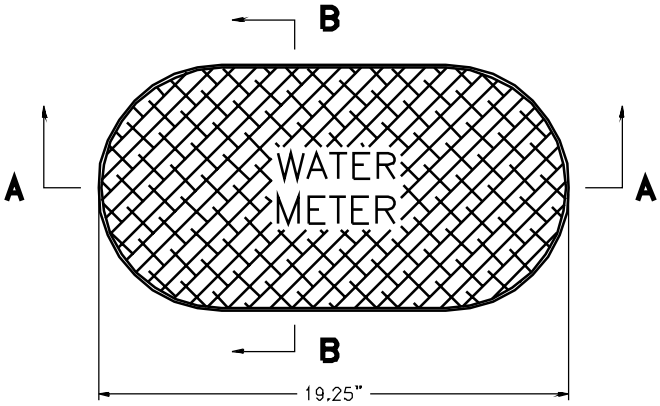

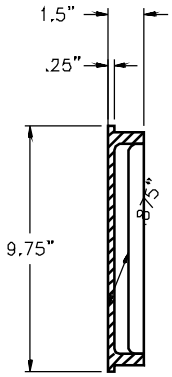

SECTION B–B

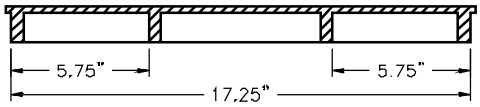

SECTION A–A

WATER METER BOX DETAIL

N.T.S.

FRANKLIN COUNTY PUBLIC UTILITIES	
DRAWING #	3/4" AND 1" WATER METER BOX DETAIL
W-16	

NOTES:

1. WATER METER SHALL BE NEPTUNE, AMCO OR APPROVED EQUAL. REGISTRATION SHALL BE IN GALLONS.
2. 2" COPPERSETTER SHALL HAVE 1" HIGH-SIDE BYPASS, 2" FIP INLET & OUTLET, AND 24" METER SPACING. 2" COPPERSETTER SHALL BE FORD MODEL NO. VB877-15HB-11-7724 OR EQUAL.

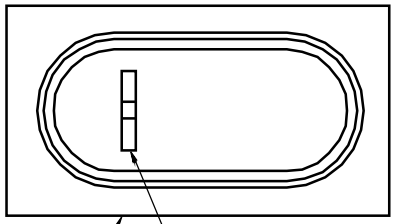

TOP VIEW

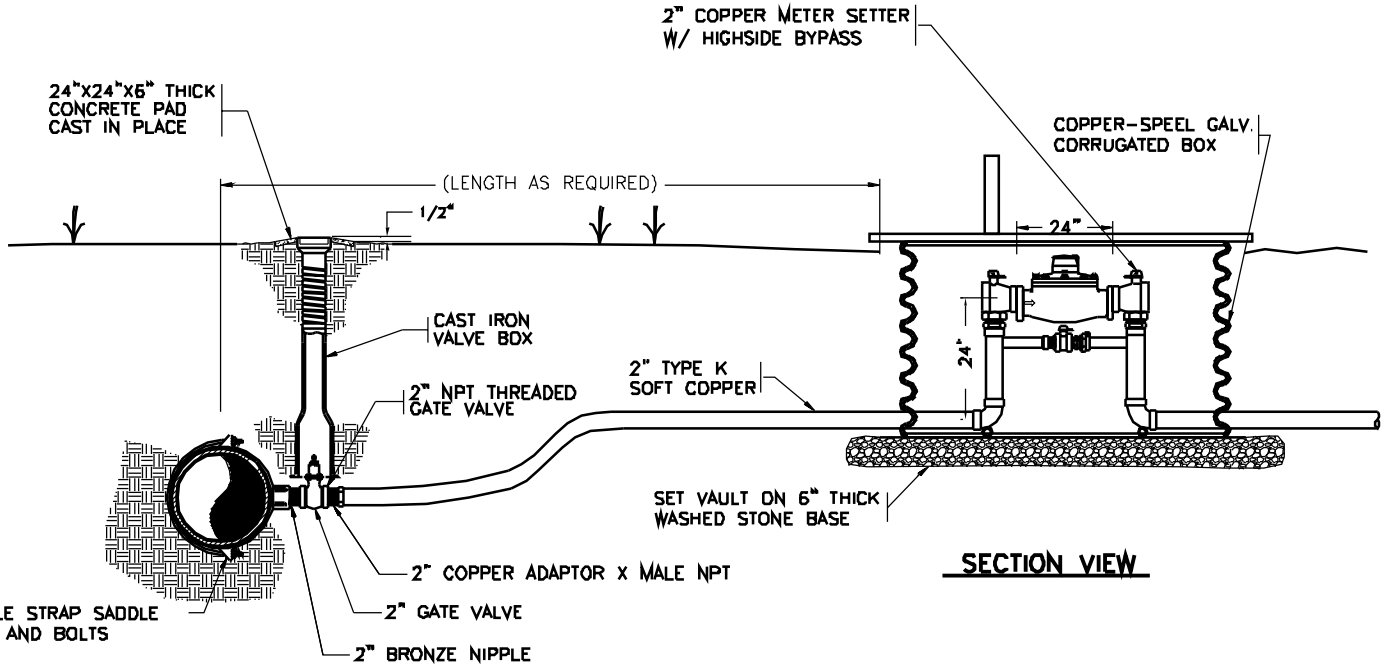

SECTION VIEW

2" WATER SERVICE DETAIL

N.T.S.

REVISIONS			
SYM.	DESCRIPTION	DATE	BY

FRANKLIN COUNTY PUBLIC UTILITIES

DRAWING # W-17

2" TYPICAL RESIDENTIAL SERVICE CONNECTION

REVISIONS			
SYM.	DESCRIPTION	DATE	BY

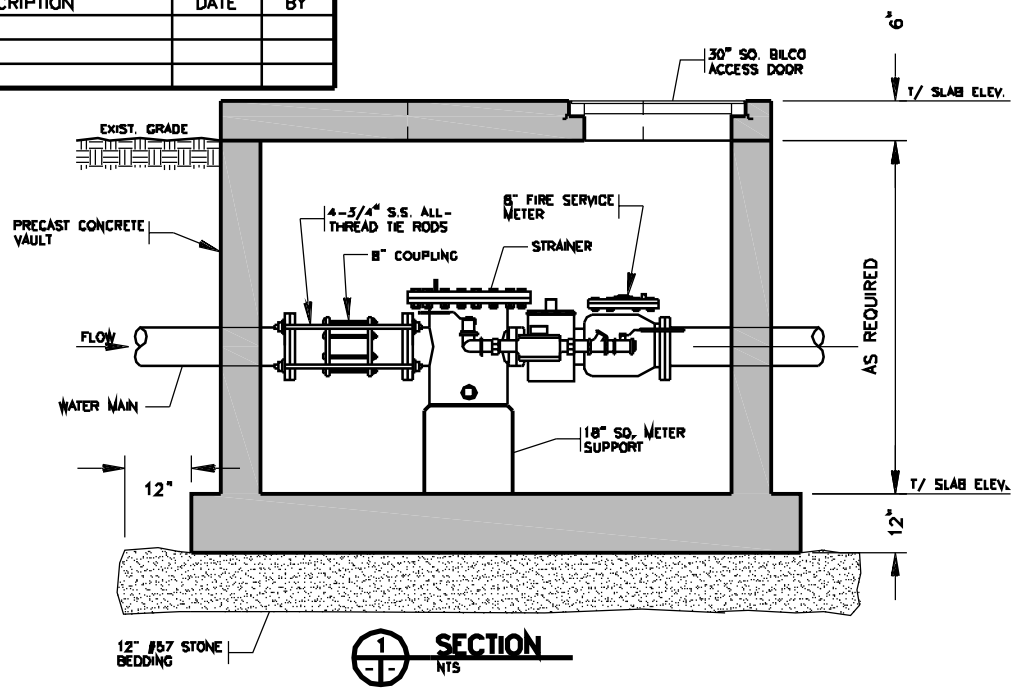

1 SECTION
NTS

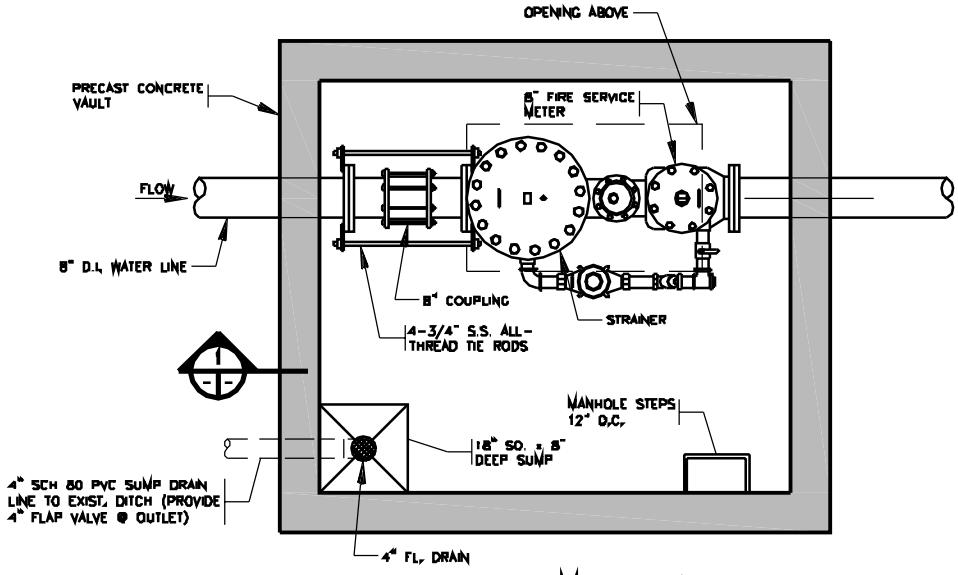

FIRE SERVICE METER VAULT
LOWER LAYOUT
NTS

NOTES:

1. METER ASSEMBLY SHALL BE NEPTUNE HP PROTECTUS II OR EQUAL.

2. THIS DETAIL PROVIDES GENERAL INFORMATION ONLY. ACTUAL DIMENSIONS WILL VARY WITH THE SIZE OF THE MAIN LINE METER.

FRANKLIN COUNTY PUBLIC UTILITIES

DRAWING #	FIRE SERVICE METER VAULT (SIZE VARIES) LAYOUT AND SECTION
W-18	

REVISIONS			
SYM.	DESCRIPTION	DATE	BY

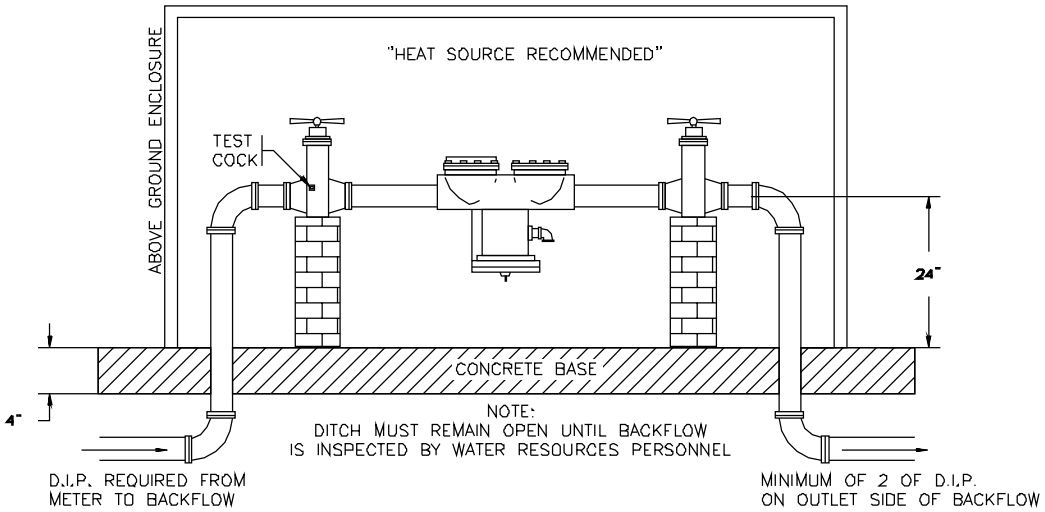

1. THE BACKFLOW DEVICE SHALL BE WITHIN 10' OF AND ON THE PROPERTY SIDE OF THE METER.
2. ALL REDUCED PRESSURE BACKFLOW DEVICES SHALL BE INSTALLED ABOVE GROUND. IN A HORIZONTAL POSITION.
3. SHUT OFF VALVES SHALL BE RESILIENT SEAT WITH FLANGED ENDS AND HANDWHEEL.
4. ALL INTERIOR AND EXTERIOR IRON SURFACES SHALL HAVE EPOXY COATINGS TO CONFORM TO ANSI/AWWA C550, OR MANUFACTURED OF STAINLESS STEEL.
5. THE BACKFLOW DEVICE SHALL HAVE 4 TEST COCKS WITH ONE INSTALLED ON THE CITY SIDE OF THE INLET GATE VALVE.
6. APPROVED UNITS: HERSEY, WILKINS, FEBCO, WATTS, CONBRACO, AMES
7. APPROVED ABOVE GROUND ENCLOSURES: "HOT BOX", HYDROCOWL, SMI OR BFP MODEL ENCLOSURES MUST HAVE A DRAIN.
8. TANDEM BACKFLOWS REQUIRED IF SERVING MULTIPLE USERS OR SERVICE CANNOT BE INTERRUPTED.
9. MUST BE TESTED UPON INSTALLATION OR PRIOR TO PUBLIC USE.

FRANKLIN COUNTY PUBLIC UTILITIES	
DRAWING #	3" - 8" REDUCED PRESSURE BACKFLOW PREVENTER
W-19	

REVISIONS			
SYM.	DESCRIPTION	DATE	BY

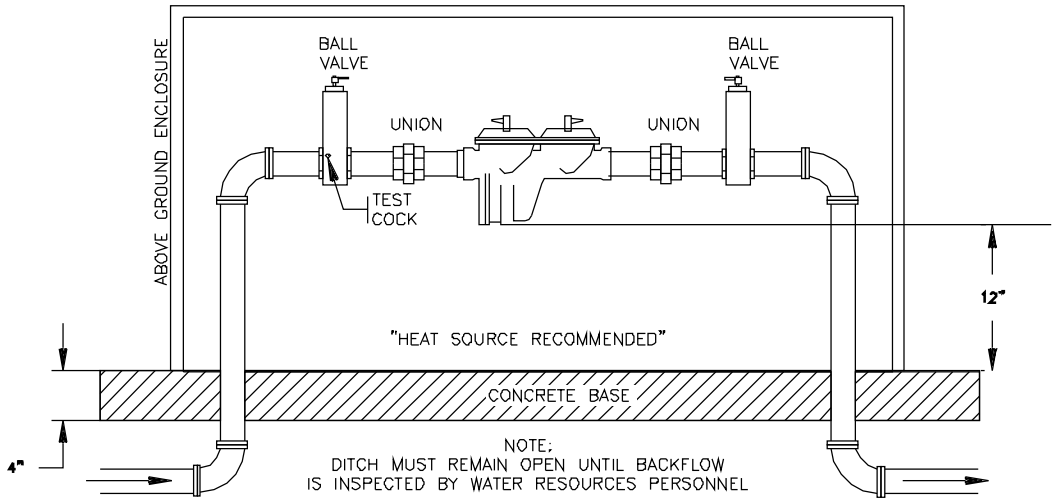

1. THE BACKFLOW DEVICE SHALL BE WITHIN 5' OF AND ON THE PROPERTY SIDE OF THE METER.
   - FOR DOMESTIC IRRIGATION THE BACKFLOW DEVICE SHALL BE WITHIN 5' OF THE METER.
2. ALL REDUCED PRESSURE BACKFLOW DEVICES SHALL BE INSTALLED ABOVE GROUND IN A HORIZONTAL POSITION.
3. SHUT OFF VALVES SHALL BE FULL PORT, LINE SIZE, LEVER TYPE, AND 1/4 TURN BRONZE BALL VALVES.
4. DEVICES SHALL HAVE TWO RESILIENT SEAT BRONZE UNIONS BETWEEN THE SHUT OFF VALVES FOR REMOVAL OF THE DEVICE.
5. THE DEVICE SHALL HAVE 4 TEST COCKS WITH ONE BEING INSTALLED ON THE CITY SIDE OF THE INLET BALL VALVE.
6. APPROVED UNITS: WILKINS, WATTS, FEBCO, CONBRACO
7. APPROVED ABOVE GROUND ENCLOSURES; "HOT BOX". HYDROCOWL, SMI, OR BFP PRODUCTS MOD, BOX MUST HAVE DRAIN,
8. TANDEM BACKGLOWS REQUIRED IF SERVING MULTIPLE USERS OR SERVICE CANNOT BE INTERRUPTED.
9. MUST BE TESTED UPON INSTALLATION OR PRIOR TO PUBLIC USE.

FRANKLIN COUNTY PUBLIC UTILITIES	
DRAWING #	3/4" - 2" REDUCED PRESSURE BACKFLOW PREVENTER
W-20	

REVISIONS			
SYM.	DESCRIPTION	DATE	BY

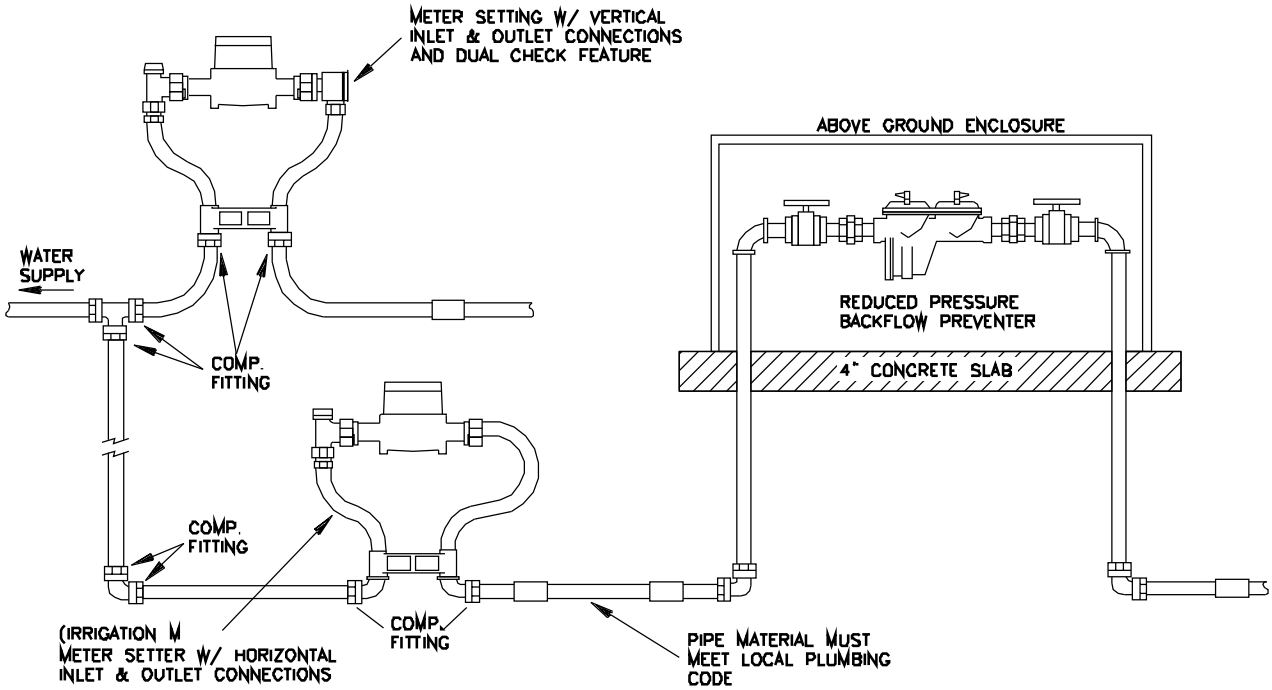

MUST BE TESTED UPON INSTALLATION OR PRIOR TO PUBLIC USE.

FRANKLIN COUNTY PUBLIC UTILITIES	
DRAWING #	ADD ON METER AND BACKFLOW
W-21	

REVISIONS			
SYM.	DESCRIPTION	DATE	BY

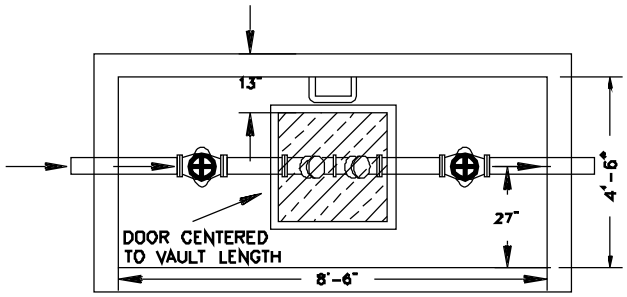

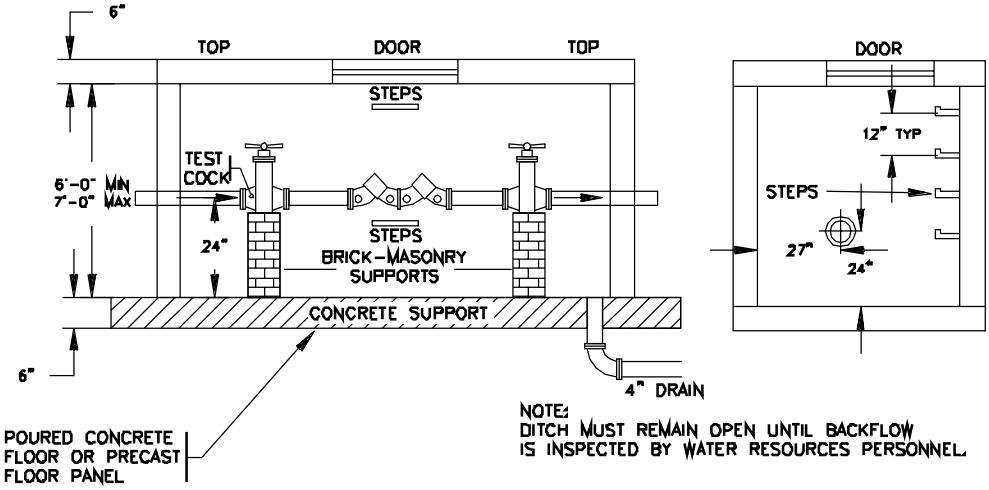

NOTE:
DITCH MUST REMAIN OPEN UNTIL BACKFLOW IS INSPECTED BY WATER RESOURCES PERSONNEL.

APPROVED UNITS

HERSEY, WILKINS, FEBCO, WATTS
CONBRACO, AMES, FEBCO AMES
DCA ARE APPROVED FOR VERTICAL
INSTALLATION.

1. THE BACKFLOW DEVICE MUST BE WITHIN 10' OF AND ON THE PROPERTY SIDE OF THE METER
2. SHUT-OFF VALVES SHALL BE RESILIENT SEATED GATE VALVES WITH FLANGED ENDS AND HANDWHEEL.
3. ALL INTERIOR AND EXTERIOR IRON SURFACES SHALL HAVE EPOXY COATINGS TO CONFORM WITH ANSI/AWWA C550, OR MANUFACTURED OF STAINLESS STEEL.
4. THE BACKFLOW DEVICE SHALL HAVE FOUR (4) TEST COCKS WITH ONE INSTALLED ON THE CITY SIDE OF THE INLET GATE VALVE.
5. ABOVE GROUND ENCLOSURE CAN BE USED, AS PER CITY SPECIFICATIONS.
6. A FOUR INCH GRAVITY FLOOR DRAIN SHALL BE PROVIDED, OR A 2" SUMP PUMP, INSTALLED IN A 12" SQUARE BY 12" DEEP SUMP BASIN.
7. VAULT TOPS SHALL BE ONE PIECE, REINFORCED CONCRETE (SEPARATE UNIT FROM THE VAULT) WITH ACCESS DOOR CAST IN ACCESS DOOR TO BE 36"X36" ALUMINUM WITH SPRINGS AND SLAM LOCK MECHANISM. ALL HARDWARE MANUFACTURED OF STAINLESS STEEL. USE U.S. FOUNDRY APS 300 OR APPROVED EQUAL. DOOR SHALL OPEN TO THE CENTER OF THE VAULT.
8. VAULT WALLS SHALL BE 6" PRECAST WALL SECTIONS, OR 8" BLOCK. IF BLOCK WALLS ARE USED, COAT OUTISDE OF WALLS WITH THORO-SEAL, OR APPROVED EQUAL.
9. TANDEM BACKFLOWS REQUIRED IF SERVING MULTIPLE USERS OR IF SERVICE CANNOT BE INTERRUPTED.
10. ALL DOUBLE CHECK VALVES SHALL BE INSTALLED IN A HORIZONTAL POSITION, EXCEPT FOR THOSE UNITS APPROVED FOR VERTICAL INSTALLATION.
11. MUST BE TESTED UPON INSTALLATION OR PRIOR TO PUBLIC USE.

FRANKLIN COUNTY PUBLIC UTILITIES	
DRAWING #	3" - 8" DOUBLE CHECK VALVES
W-22	

REVISIONS			
SYM.	DESCRIPTION	DATE	BY

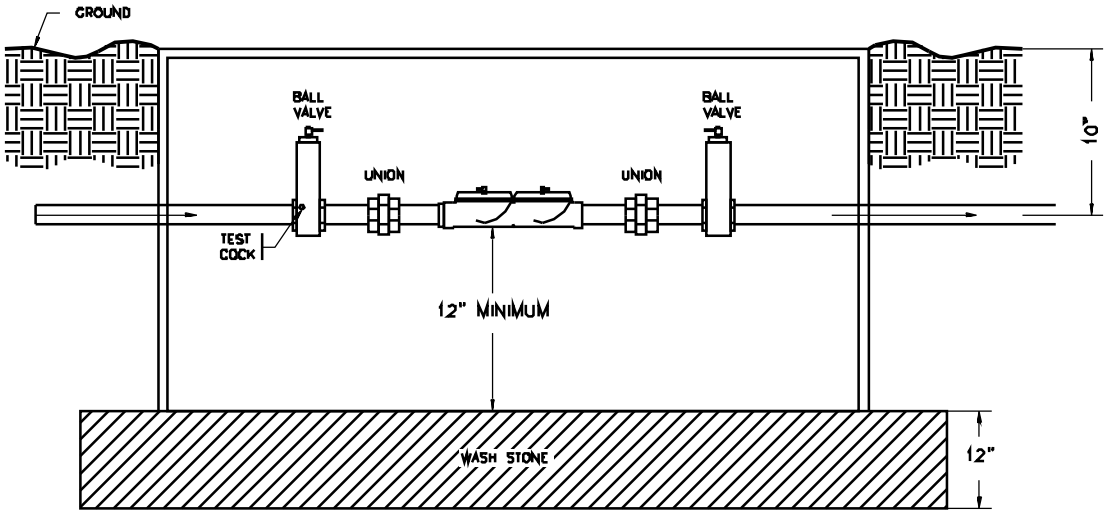

NOTES:

1. THE BACKFLOW DEVICE MUST BE WITHIN 5' AND ON THE PROPERTY SIDE OF THE METER.
2. THE UNIT SHALL BE PURCHASED AS AN ASSEMBLY INCLUDING 4 TEST COCKS WITH ONE ON THE CITY SIDE OF THE INLET BALL VALVE.
3. ALL DOUBLE CHECK VALVES MUST BE INSTALLED IN A HORIZONTAL POSITION.
4. SHUT OFF VALVES SHALL BE FULL PORT, LINE SIZE, LEVER TYPE, AND 1/4 TURN BRONZE BALL VALVES.
5. DEVICES SHALL HAVE TWO RESILIENT SEAT BRONZE UNIONS BETWEEN THE SHUT OFF VALVES FOR REMOVAL OF THE DEVICE.
6. THE BOX SHALL BE THE GALVANIZED OVAL SHAPED METER BOX AS MANUFACTURED BY SOUTHEASTERN DISTRIBUTORS. (OR CAST IRON METER BOX SECTION 12.2.5)
7. APPROVED UNITS; HERSEY FDC, WILKINS, FEBCO Y. WATTS OR. CONBRACO.
8. DRAIN REQUIRED IF INSTALLED IN PAVED AREA.
9. TANDEM BACKFLOWS REQUIRED IF SERVING MULTIPLE USERS OR SERVICE CANNOT BE INTERRUPTED.
10. DITCH MUST REMAIN OPEN UNTIL BACKFLOW INSPECTED BY WATER RESOURCES PERSONNEL.
11. MUST BE TESTED UPON INSTALLATION OR PRIOR TO PUBLIC USE.

FRANKLIN COUNTY PUBLIC UTILITIES	
DRAWING #	3/4" - 2" DOUBLE CHECK VALVES
W-23	

NOTE:
MINIMUM STANDARDS FOR
PROPER AIR GAP ARE:
2 TIMES THE DIAMETER OF THE FILL LINE
EX: 4" FILL LINE = 8" POSITIVE AIR GAP
ABOVE THE TANK

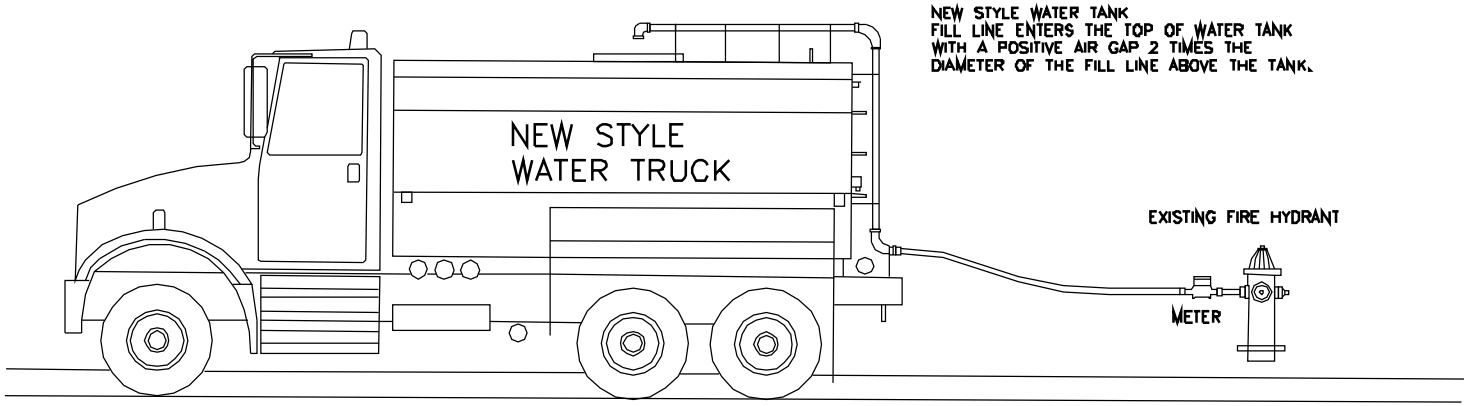

NEW STYLE WATER TANK
FILL LINE ENTERS THE TOP OF WATER TANK
WITH A POSITIVE AIR GAP 2 TIMES THE
DIAMETER OF THE FILL LINE ABOVE THE TANK.

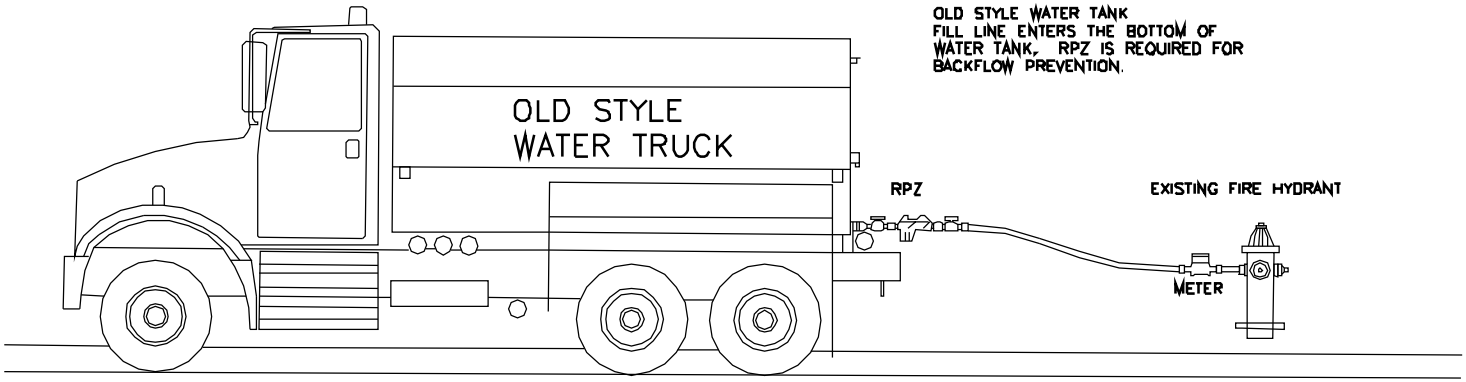

OLD STYLE WATER TANK
FILL LINE ENTERS THE BOTTOM OF
WATER TANK. RPZ IS REQUIRED FOR
BACKFLOW PREVENTION.

FRANKLIN COUNTY PUBLIC UTILITIES

WATER FROM HYDRANTS
TANKER DETAIL

DRAWING #
W-24

REVISIONS

SYM.	DESCRIPTION	DATE	BY

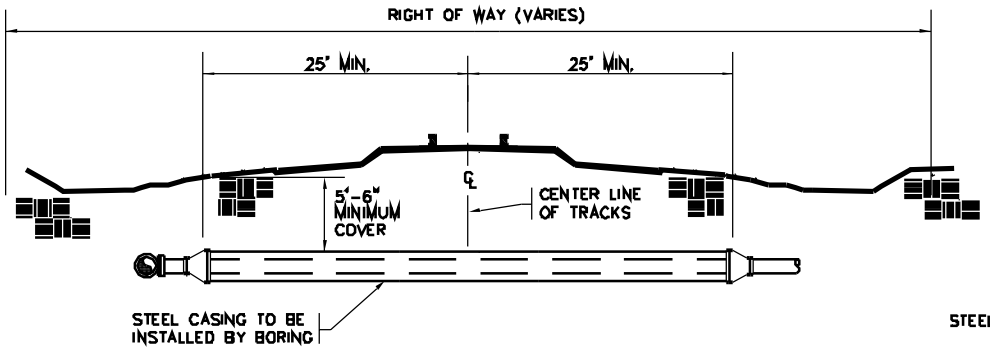

TYPICAL BORING DETAIL UNDER RAILROAD

N.T.S.

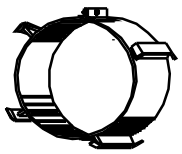

PLAN VIEW

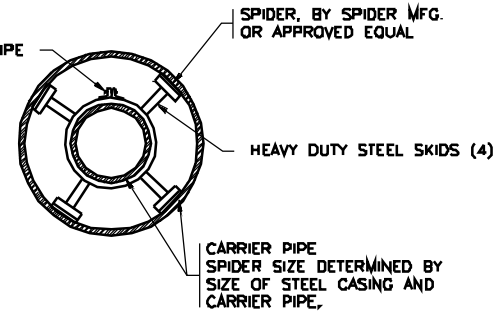

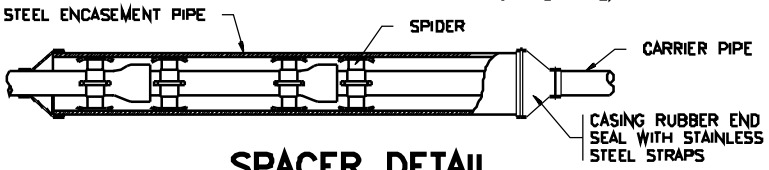

SPACER DETAIL

N.T.S.

SYM.	DESCRIPTION	DATE	BY

REVISIONS

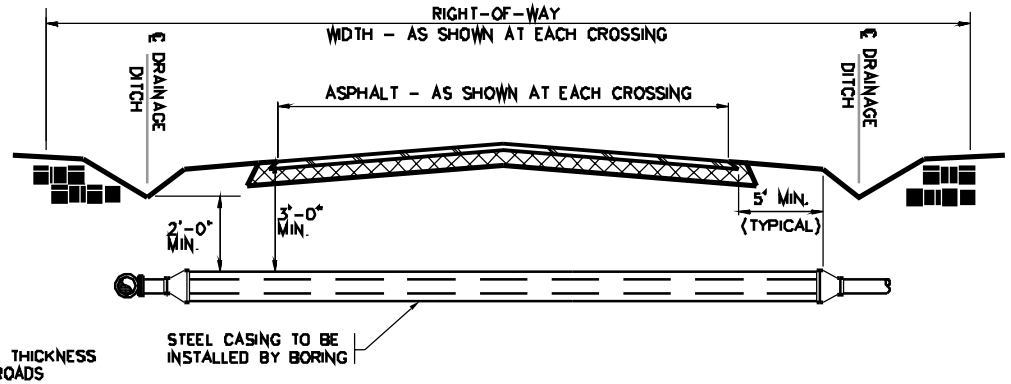

TYPICAL BORING DETAIL UNDER HIGHWAYS

N.T.S.

NOMINAL D.I. CARRIER PIPE DIA. (INCHES)	STEEL CASING MINIMUM O.D. (INCHES)	MIN. WALL THICKNESS FOR HIGHWAYS (INCHES)	MIN. WALL THICKNESS FOR RAILROADS (INCHES)
3	8.625	0.250	0.250
4	10.750	0.250	0.250
6	14.0	0.250	0.250
8	16.0	0.250	0.312
10	18.0	0.250	0.312
12	20.0	0.250	0.375
14	24.0	0.250	0.375
16	26.0	0.312	0.500
18	28.0	0.312	0.500
20	30.0	0.312	0.500
24	34.0	0.500	0.625

FRANKLIN COUNTY PUBLIC UTILITIES

DRAWING # W-25

BORE AND JACK DETAILS

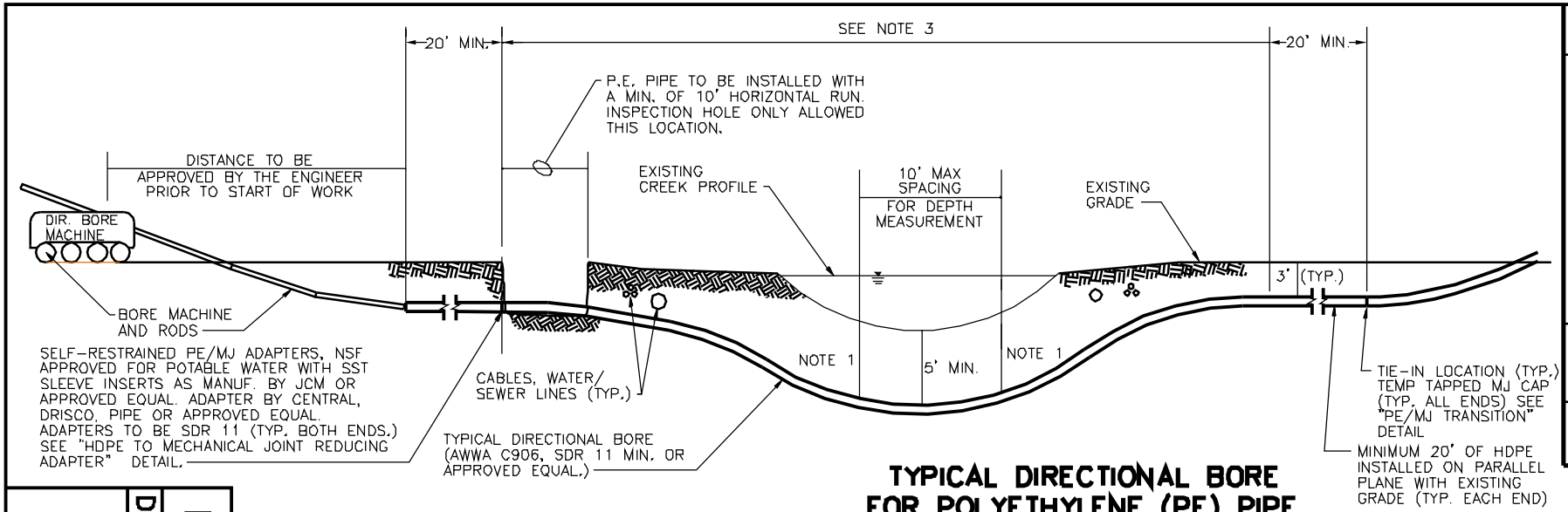

TYPICAL DIRECTIONAL BORE FOR POLYETHYLENE (PE) PIPE

N.T.S.

HDPE PRESSURE RATING

HDPE DR11	160 PSI
HDPE DR9	200 PSI
HDPE DR7	250 PSI

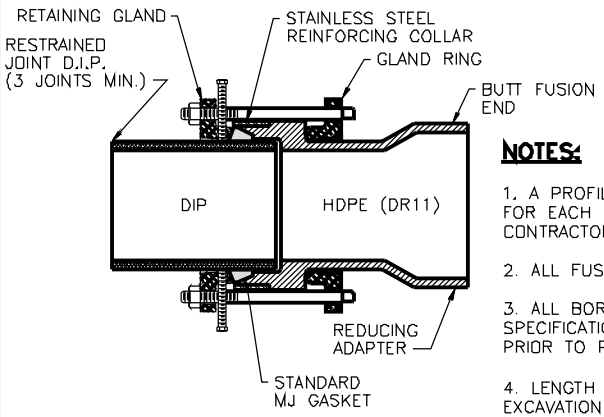

HDPE TO MECHANICAL JOINT REDUCING ADAPTER

N.T.S.

NOTES:

1. A PROFILE AND PLAN SHALL BE PROVIDED FROM ENTRY TO EXIT FOR EACH DIRECTIONAL BORE SECTION BY THE DIRECTIONAL BORE CONTRACTOR.

2. ALL FUSED HDPE PIPE SHALL BE AIR TESTED PRIOR TO BORING.

3. ALL BORE SECTIONS SHALL BE HYDROSTATICALLY TESTED PER SPECIFICATION STANDARDS UPON COMPLETION OF INSTALLATION AND PRIOR TO PLACING THE WATER MAIN ON-LINE.

4. LENGTH OF CROSSING, LOCATION OF INSPECTION/OBSERVATION EXCAVATION, NUMBER OF P.E. PIPE JOINTS, LOCATION OF BORE MACHINE, AUGER ENTRANCE LOCATION, AND TIE-IN POINTS ARE TO BE APPROVED BY THE ENGINEER PRIOR TO ANY START OF WORK.

5. THIS DETAIL IS ALSO APPLICABLE TO STREAMS, WETLANDS, LARGE STORM DRAINS, AND SIMILAR APPLICATIONS FOR DIRECTIONAL BORE WITH POLY- ETHYLENE PIPE.

6. THE BORE DEVELOPED FOR THE LEAD IN END OF THE PIPE SHALL BE KEPT AT A MINIMUM DIAMETER FOR THE PIPE INSTALLATION. THE LEAD IN END SHALL BE PULLED THROUGH WITHOUT THE M.J. FLANGE ATTACHED FOR LARGER THAN 6" PIPE INSTALLATIONS. THE M.J. FLANGE FOR SAID LEAD IN END SHALL BE INSTALLED AFTER THE PIPE INSTALLATION WITH THE USE OF A SPLIT M.J. FLANGE PER THE DETAIL ON THIS DRAWING.

7. CONTRACTOR SHALL FURNISH TO THE ENGINEER THE AS-BUILT LOCATION OF THE BORE IN ACCORDANCE WITH THE SPECIFICATIONS FOR DIRECTIONAL BORING.

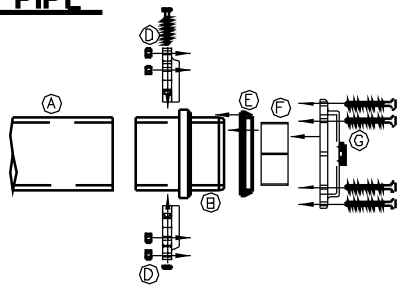

PRE-ASSEMBLY

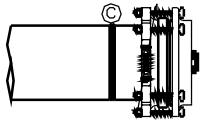

A) HDPE PIPE
B) HDPE/MJ TRANS. FITTING
C) HDPE FUSED JOINT
D) SPLIT MJ GLAND
E) MJ RUBBER GASKET
F) SST SLEEVE INSERT
G) MJ TAPPED CAP

ASSEMBLED

HDPE/MJ TRANSITION ASSEMBLY

N.T.S.

REVISIONS			
SYM.	DESCRIPTION	DATE	BY

FRANKLIN COUNTY PUBLIC UTILITIES

DRAWING # W-26

DIRECTIONAL BORE DETAILS

REVISIONS			
SYM.	DESCRIPTION	DATE	BY

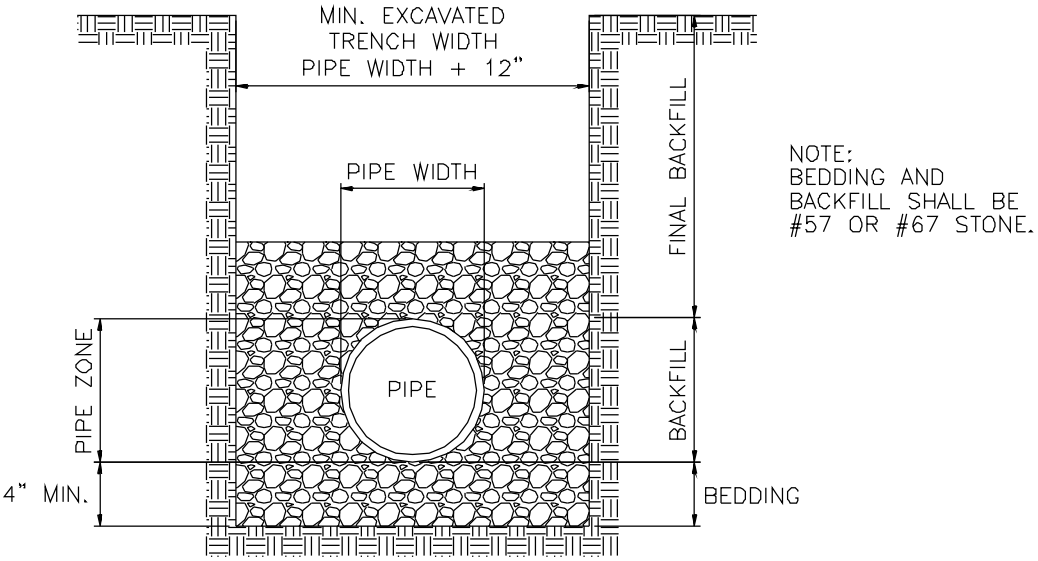

SANITARY SEWER MAIN TRENCH DETAIL

N.T.S.

NOTES:

1. BEDDING WITH STONE TO SPRING LINE FOR DEPTHS UP TO 12'. BACKFILL WITH STONE TO TOP OF PIPE FOR DEPTHS GREATER THAN 12'.
2. UNDER AREAS TO BE SEEDED OR SODDED, COMPACT SUCCEEDING LAYERS OF FINAL BACKFILL IN 12" LOOSE LIFTS TO 95% MAXIMUM DENSITY.
3. UNDER STRUCTURES, PAVEMENTS, AND ROAD SHOULDERS, COMPACT SUCCEEDING LAYERS OF FINAL BACKFILL IN 6" LOOSE LIFTS TO 95% MAXIMUM DENSITY EXCEPT COMPACT TOP 12" OF SUBGRADE TO 95 % MAXIMUM DENSITY

FRANKLIN COUNTY PUBLIC UTILITIES	
DRAWING #	SANITARY SEWER MAIN TRENCH DETAIL
S-1	

REVISIONS			
SYM.	DESCRIPTION	DATE	BY

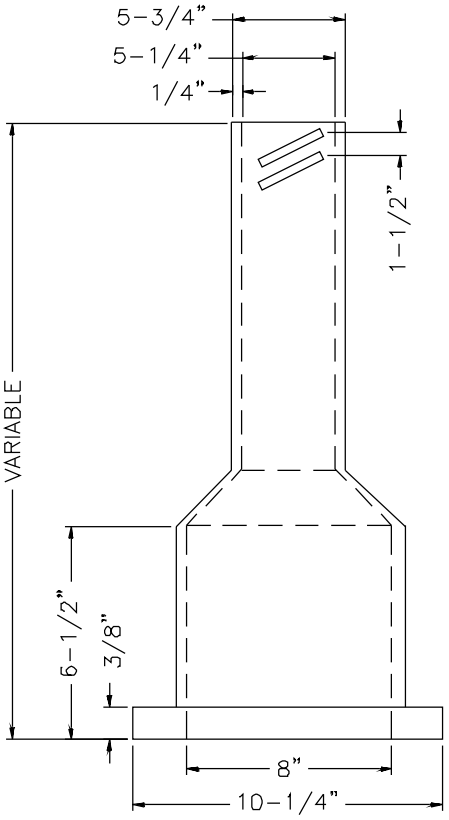

BOTTOM SECTION

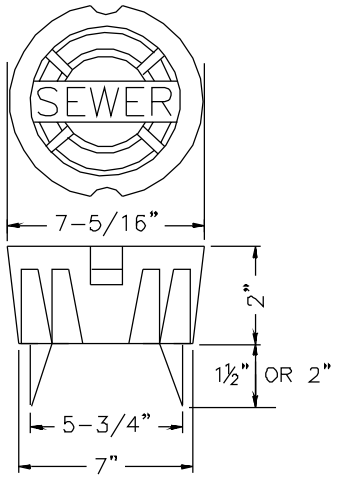

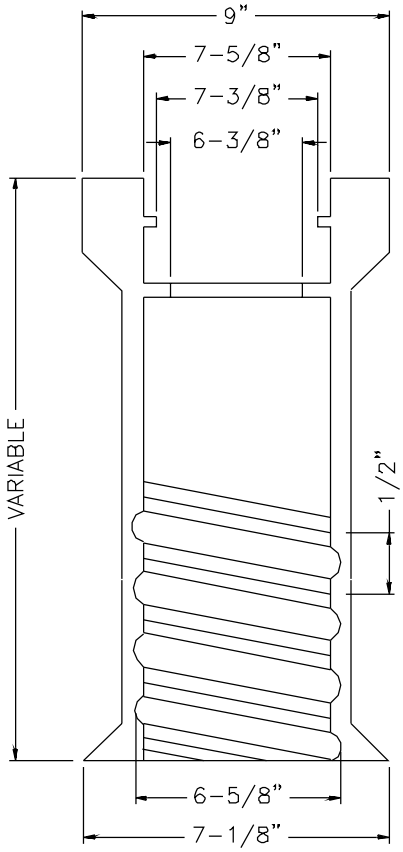

TOP SECTION

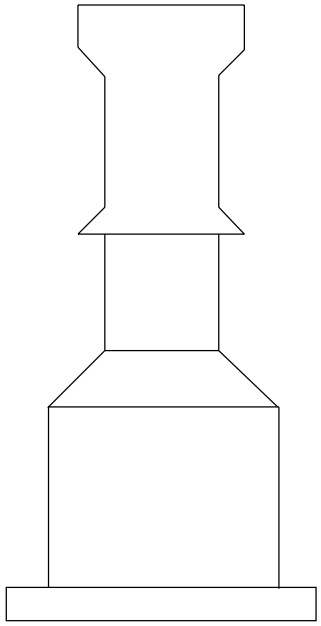

COMPLETE BOX

DIMENSIONS IN INCHES
LENGTH

TOP	BOTTOM
10	15
10	24
16	24
16	36
26	36
26	48
26	60

NOTES:

1. VALVE BOX SHALL HAVE RAISED LETTERS "SEWER" CAST INTO COVER.
2. VALVE BOX ACCOMMODATES 4" THRU 12" VALVES.
3. VALVE BOX SHALL HAVE $\frac{3}{8}$" HOLE DRILLED IN TOP SECTION THRU WHICH A $\frac{1}{4}$" X $1\frac{1}{2}$" GALVANIZED BOLT SHALL BE USED TO SECURE A 12GA. THHN TRACER WIRE FOR NON-FERROUS PIPE. A $\frac{1}{2}$" WASHER SHALL BE USED BETWEEN NUT AND INSIDE OF BOX. TIGHTEN HAND TIGHT.
4. SCREW TYPE VALVE BOXES ARE REQUIRED.
5. DIMENSIONS SHOWN MAY VARY DEPENDING UPON THE MANUFACTURER.

FRANKLIN COUNTY PUBLIC UTILITIES

DRAWING #	SCREW-TYPE VALVE BOX
S-2	

REVISIONS			
SYM.	DESCRIPTION	DATE	BY

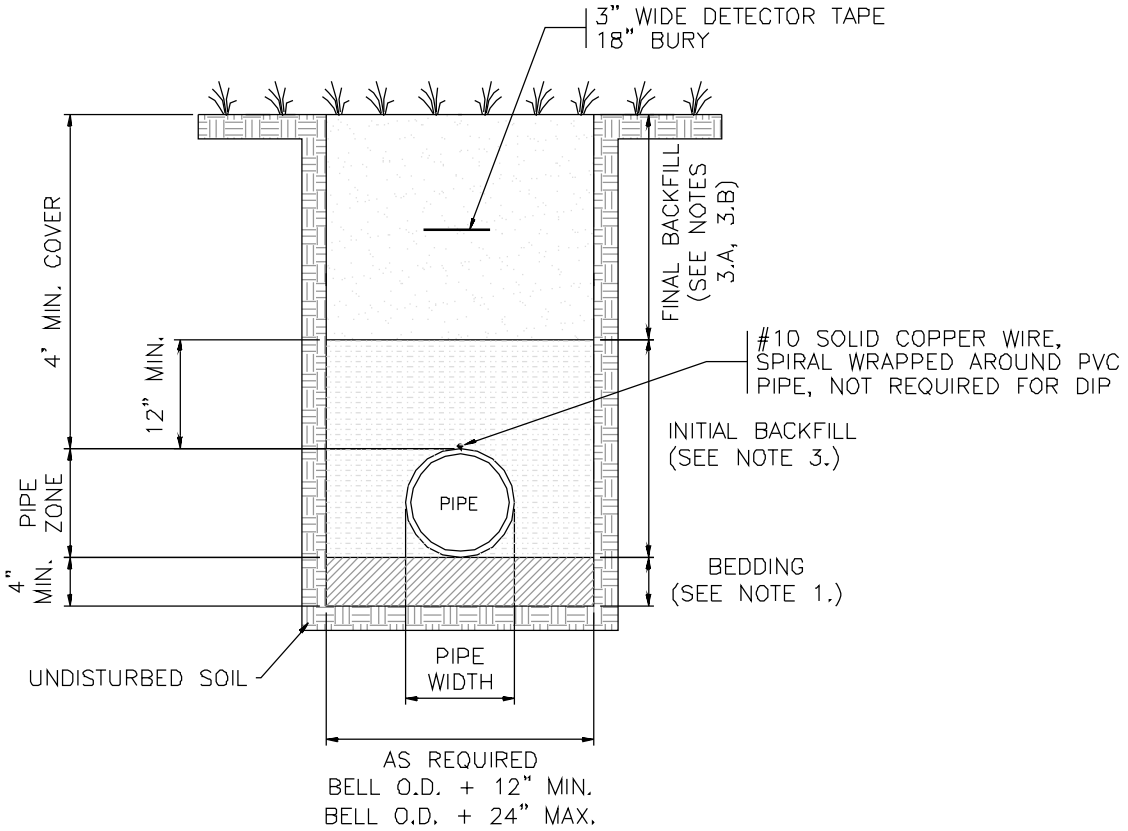

FORCE MAIN TRENCH DETAILS
TYPE 3 LAYING CONDITIONS

N.T.S.

NOTES:

1. LAYING CONDITIONS AS PER AWWA C600 AND C605 STANDARDS.
2. BEDDING MATERIAL SHALL BE 4" MINIMUM THICKNESS, LOOSE SOIL (DEFINED AS NATIVE SOIL EXCAVATED FROM THE TRENCH), FREE FROM ROCKS AND SHALL PROVIDE UNIFORM SUPPORT FOR THE FULL LENGTH OF PIPE. COMPACT TO 95% MAXIMUM DENSITY.
3. INITIAL BACKFILL SHALL BE LIGHTLY CONSOLIDATED IN MAXIMUM 6" LOOSE LIFTS, COMPACTED TO 95% OF MAXIMUM DENSITY.
3. UNDER AREAS TO BE SEEDED OR SODDED, COMPACT SUCCEEDING LAYERS OF FINAL BACKFILL IN 12" LOOSE LIFTS TO 85% MAXIMUM DENSITY.
3. UNDER STRUCTURES, PAVEMENTS AND ROAD SHOULDERS, COMPACT SUCCEEDING LAYERS OF FINAL BACKFILL IN 6" LOOSE LIFTS TO 95% MAXIMUM DENSITY EXCEPT COMPACT TOP 12" OF SUBGRADE TO 98% MAXIMUM DENSITY.
4. PROVIDE #10 SOLID COPPER WIRE IN SUFFICIENT LENGTH TO BE CONTINUOUS OVER EACH SEPARATE RUN OF ALL BURIED PVC PIPING. AT VALVE BOXES, BRING WIRE TO WITHIN 6 IN. OF TOP OF BOX AND INSERT INTO BOX THROUGH DRILLED HOLE. NOT REQUIRED FOR DUCTILE IRON PIPE.
5. INSTALL 3' WIDE DETECTOR TAPE AT 18" DEPTH. TAPE SHALL HAVE MIDDLE FOIL LAYER.

FRANKLIN COUNTY PUBLIC UTILITIES	
DRAWING #	STANDARD SEWER FORCE MAIN TRENCH DETAIL
S-3	

REVISIONS			
SYM.	DESCRIPTION	DATE	BY

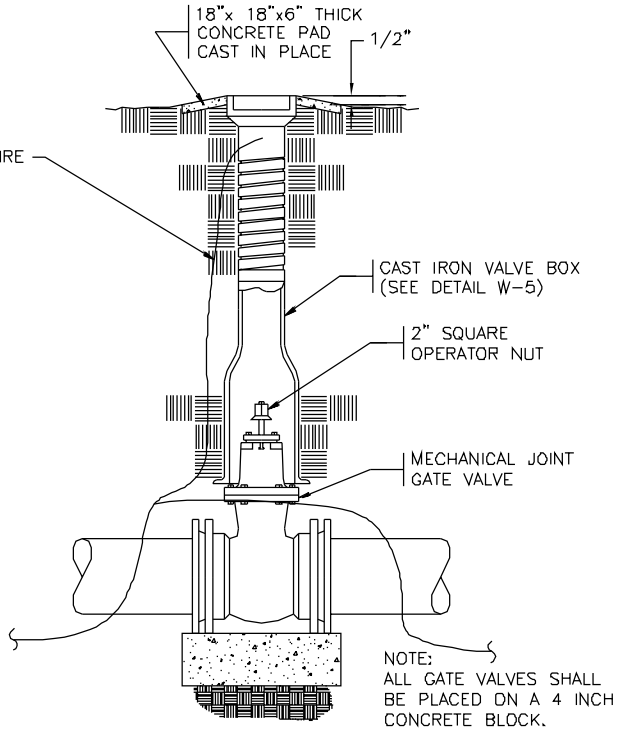

NOTES:

1.) INSTALL MARKER POSTS ON EDGE OF THE DOT R/W LINE.

2.) PROVIDE MARKER POSTS AT ALL LINE VALVES.

3.) ABBREVIATIONS STAMPED ON POST AS FOLLOWS:
MV = MAIN VALVE BO=BLOW OFF VALVE

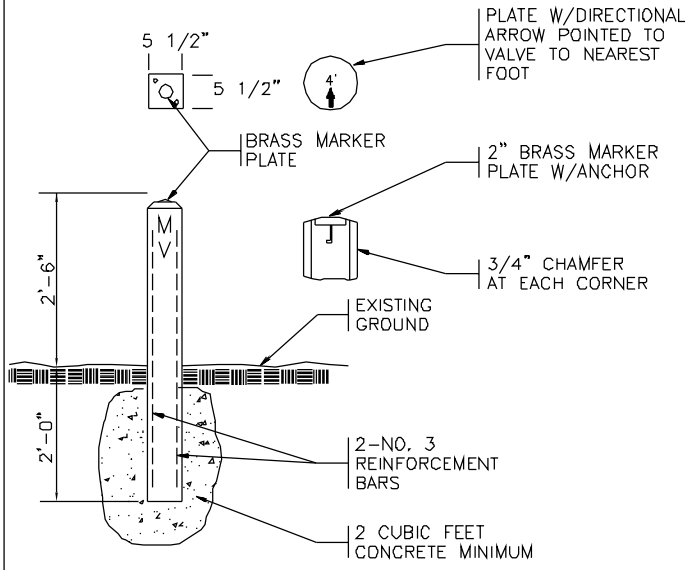

VALVE MARKER POST DETAIL

N.T.S.

NOTES:

1. PLACE GATE VALVES ON 4" CONCRETE BLOCK.
2. WHERE PVC PIPE IS BEING INSTALLED, 6 IN. OF COMPACTED #57 STONE MAY BE USED IN LIEU OF THE 4" CONCRETE BLOCK.
3. MAXIMUM SPACING FOR SEWER FORCE MAIN ISOLATION VALVES IS 1,000 LF.

GATE VALVE ASSEMBLY

N.T.S.

FRANKLIN COUNTY PUBLIC UTILITIES

DRAWING #	GATE VALVE ASSEMBLY FOR SEWER FORCE MAINS
S-4	

REVISIONS			
SYM.	DESCRIPTION	DATE	BY

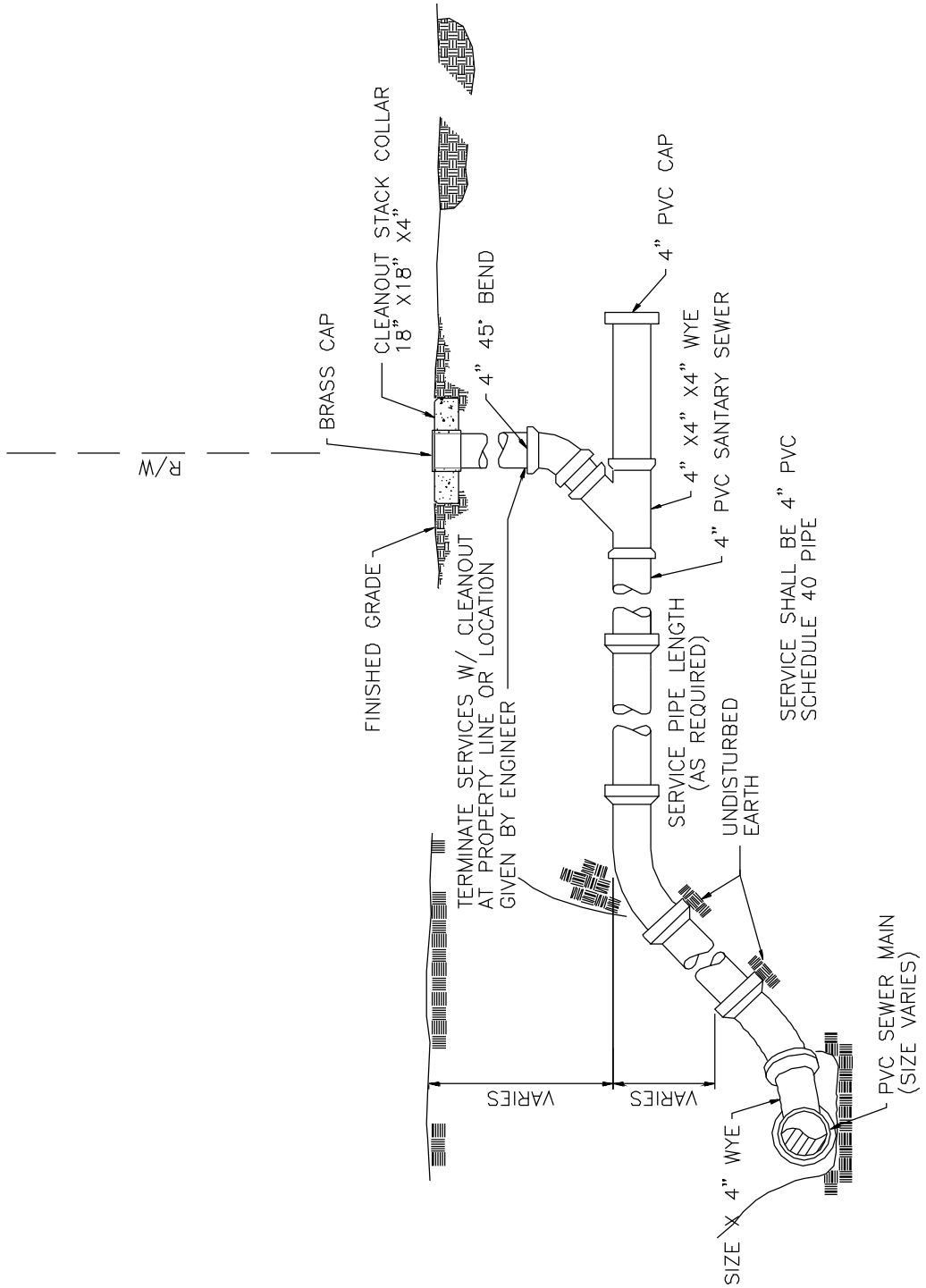

4" SEWER SERVICE CONNECTION
WITH CLEAN OUT DETAIL

N.T.S.

FRANKLIN COUNTY PUBLIC UTILITIES

DRAWING #	4" SEWER SERVICE CONNECTION WITH CLEAN OUT DETAIL (NEW INSTALLATION)
S-5	

REVISIONS			
SYM.	DESCRIPTION	DATE	BY

TYPICAL SANITARY SEWER SERVICE BACKWATER VALVE STYLES:

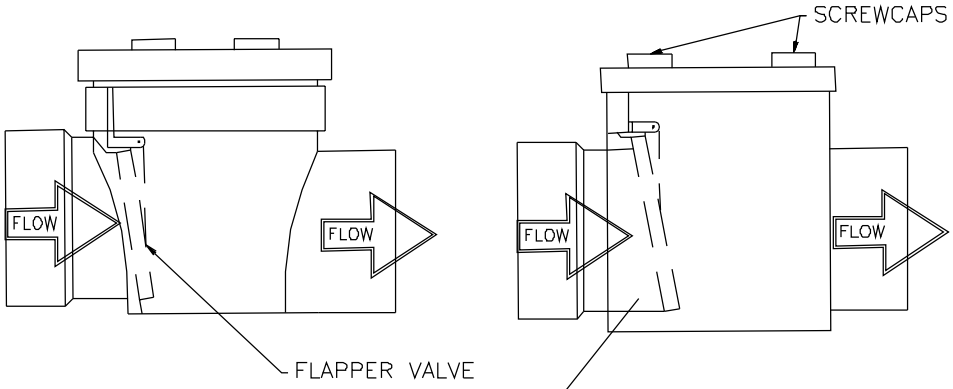

TYPICAL BACKWATER VALVE INSTALLATIONS:

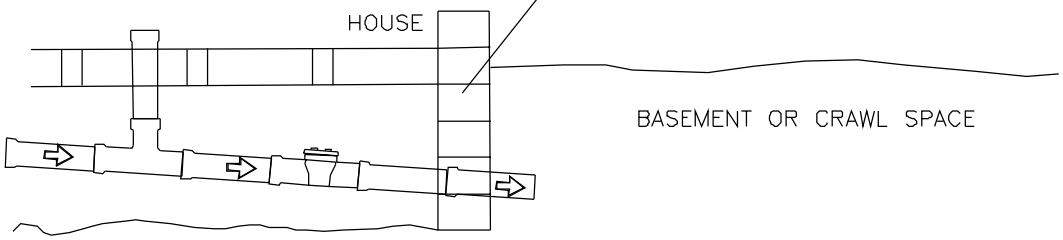

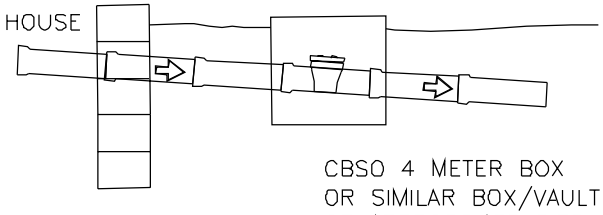

YARD/VAULT INSTALLATION FOR BUILDINGS BUILT ON SLAB AND OTHER LOCATIONS WHERE VALVE CANNOT BE INSTALLED IN BASEMENT OR CRAWL SPACE.

CBSO 4 METER BOX OR SIMILAR BOX/VAULT OF APPROPRIATE SIZE TO ALLOW REGULAR MAINTENANCE

NOTES:
1. INSTALLATIONS OF GREATER THAN 4' IN DEPTH MAY REQUIRE MANHOLE.
2. VALVES MUST BE INSTALLED IN A LOCATION AT WHICH THEY CAN BE CLEANED AND SERVICED REGULARLY.

TYPICAL SANITARY SEWER SERVICE BACK-WATER VALVE INSTALLATION

(NTS)

FRANKLIN COUNTY PUBLIC UTILITIES	
DRAWING #	TYPICAL SEWER SERVICE BACK-WATER VALVE INSTALLATION DETAIL
S-6	

REVISIONS			
SYM.	DESCRIPTION	DATE	BY

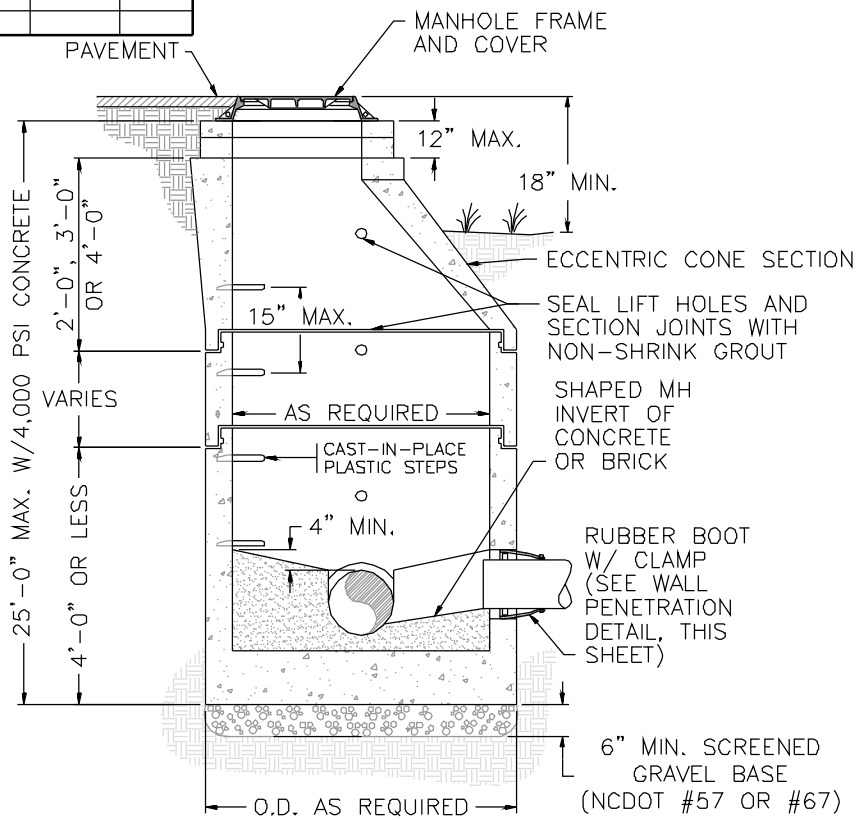

ECCENTRIC CONE TOP MANHOLE SECTION A-A

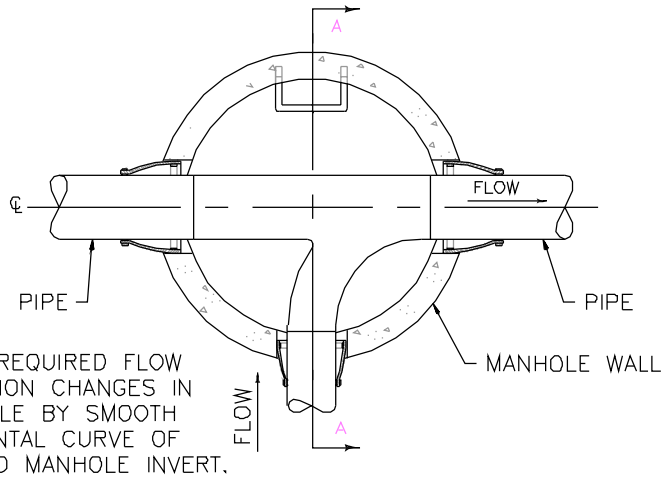

NOTE:
MAKE REQUIRED FLOW DIRECTION CHANGES IN MANHOLE BY SMOOTH TANGENTAL CURVE OF SHAPED MANHOLE INVERT.

PLAN VIEW

PRECAST MANHOLE DETAIL

N.T.S.

FRANKLIN COUNTY PUBLIC UTILITIES

DRAWING #	PRECAST MANHOLE DETAIL
S-7	

REVISIONS			
SYM.	DESCRIPTION	DATE	BY

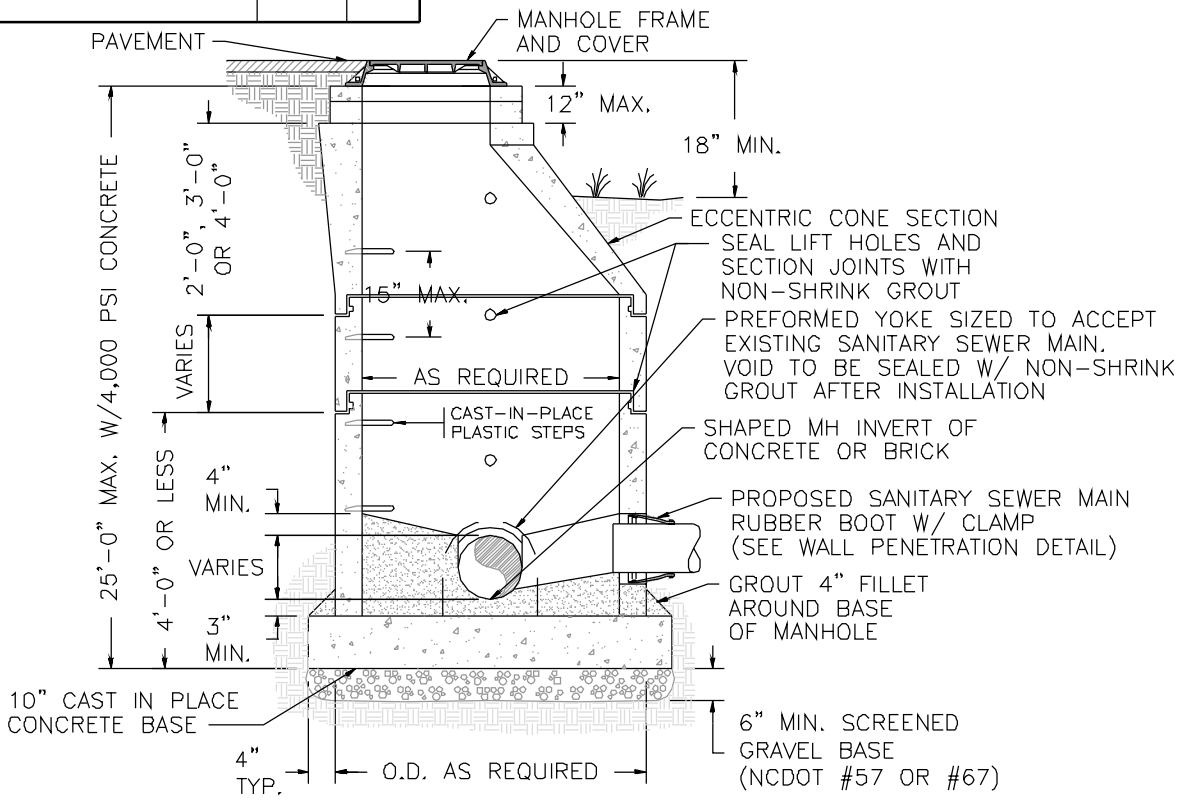

ECCENTRIC CONE TOP MANHOLE
SECTION A–A

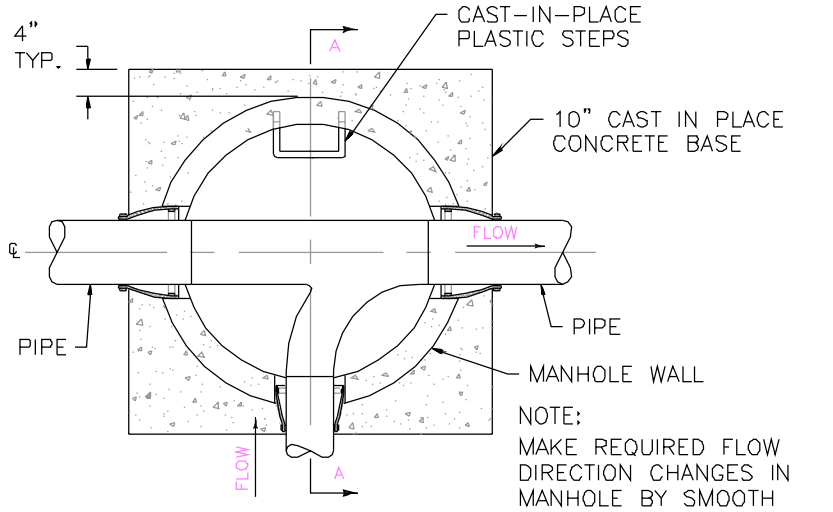

PLAN VIEW

NOTE:
MAKE REQUIRED FLOW DIRECTION CHANGES IN MANHOLE BY SMOOTH TANGENTAL CURVE OF SHAPED MANHOLE INVERT.

PRECAST MANHOLE DETAIL
(BUILT OVER EXISTING SANITARY SEWER)

N.T.S.

FRANKLIN COUNTY PUBLIC UTILITIES

DRAWING #	PRECAST MANHOLE DETAIL BUILT OVER EXISTING SANITARY SEWER
S-8	

REVISIONS			
SYM.	DESCRIPTION	DATE	BY

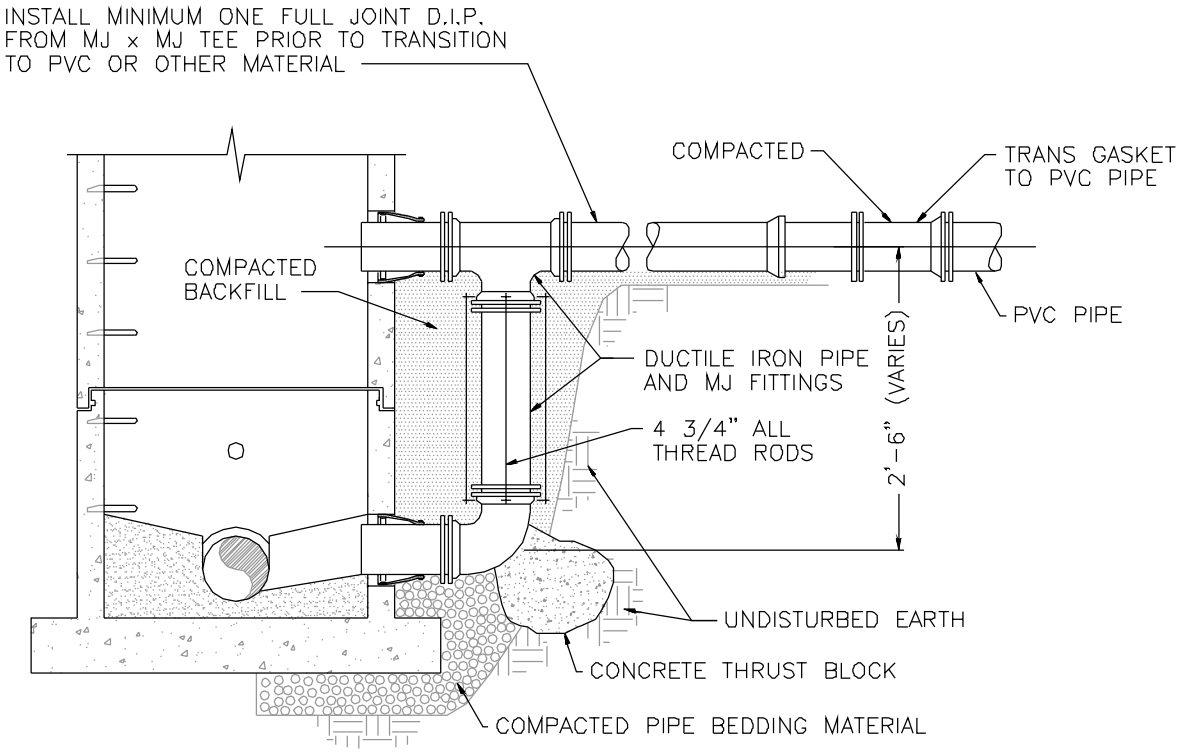

PRECAST CONCRETE MANHOLE WITH OUTSIDE DROP CONNECTION

N.T.S.

NOTES:

1) OUTSIDE DROP REQUIRED FOR DROPS 30" OR GREATER.

FRANKLIN COUNTY PUBLIC UTILITIES	
DRAWING #	PRECAST CONCRETE MANHOLE WITH OUTSIDE DROP CONNECTION
S-9	

REVISIONS			
SYM.	DESCRIPTION	DATE	BY

NOTES:

1. FLEX. BOOT SHALL BE CONNECTED TO MH. WITH STAINLESS STEEL EXPANSION RING. FLEXIBLE BOOT CONNECTORS SHALL CONFORM TO ASTM C-923 SPEC.

NOTE:

VENT SHALL EXTEND TO 1 FOOT ABOVE THE 100 YEAR FLOOD ELEVATION-OR CONTRACTOR MAY INSTALL SCREENED SEWER VENT CHECK VALVE 18" ABOVE GRADE

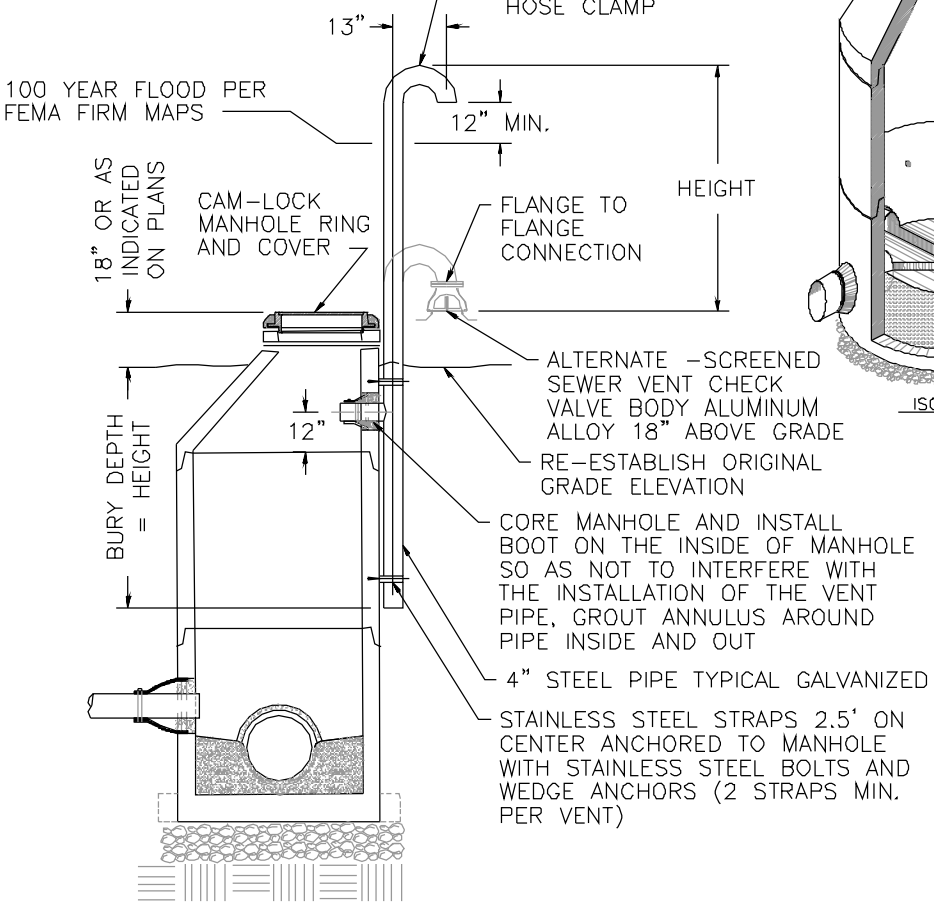

SECTION THRU MANHOLE

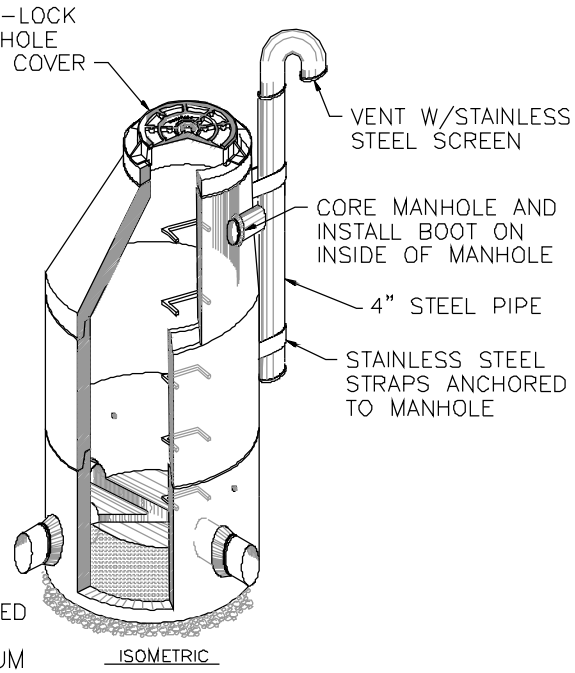

ISOMETRIC

MANHOLE VENT DETAIL

N.T.S.

FRANKLIN COUNTY PUBLIC UTILITIES

DRAWING #	MANHOLE VENT DETAIL
S-10	

REVISIONS			
SYM.	DESCRIPTION	DATE	BY

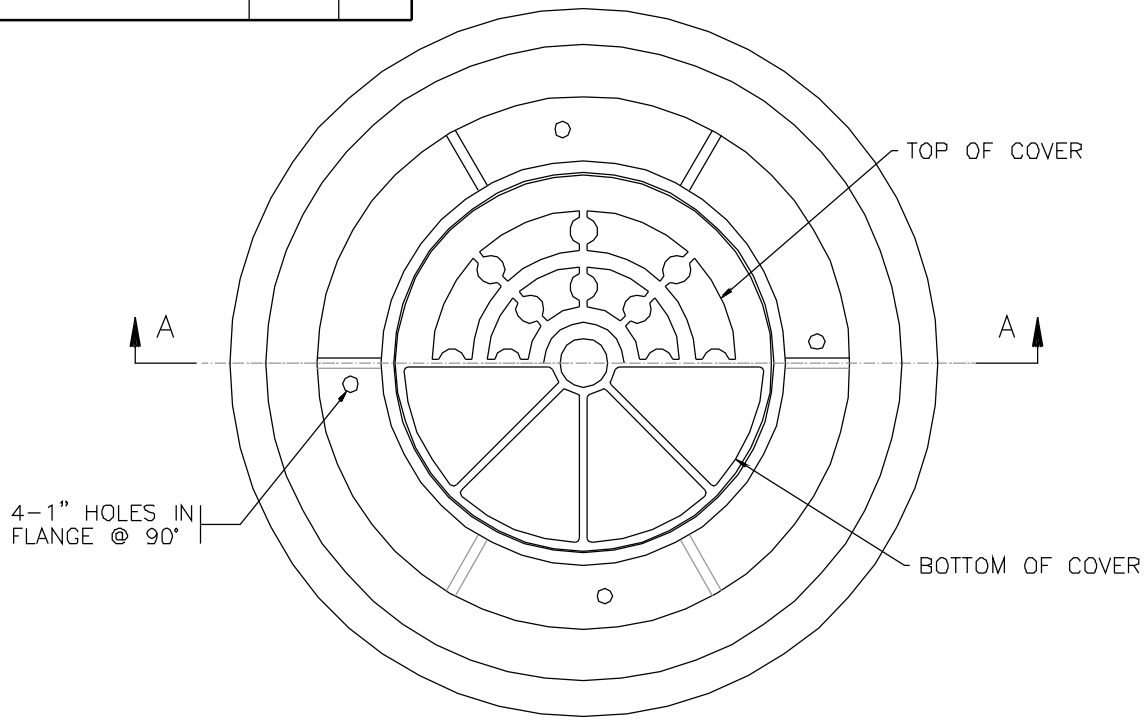

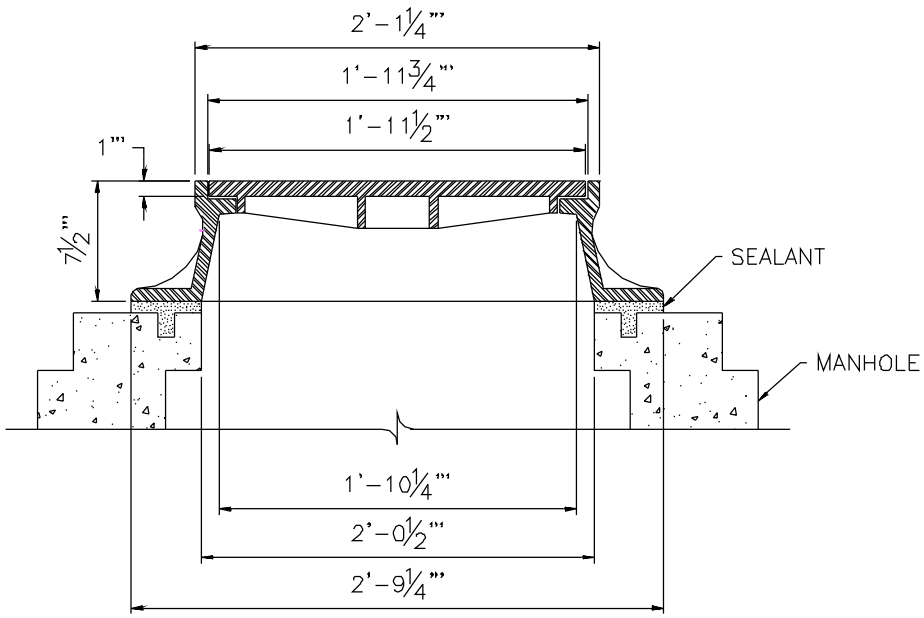

SECTION A-A

MANHOLE COVER DETAIL

N.T.S.

NOTES:

1. COVERS TO READ "SANITARY SEWER"

FRANKLIN COUNTY PUBLIC UTILITIES	
DRAWING #	MANHOLE COVER DETAIL
S-11	

REVISIONS			
SYM.	DESCRIPTION	DATE	BY

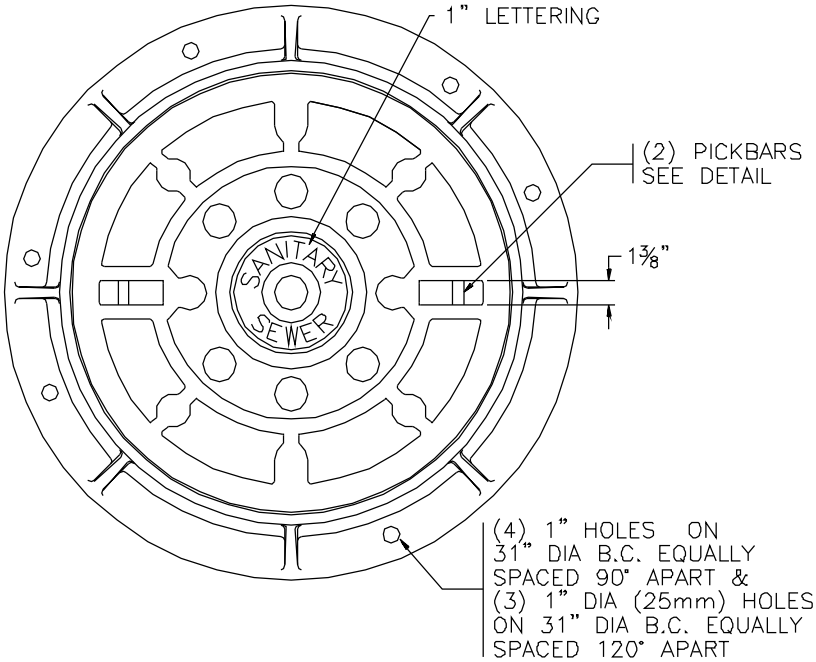

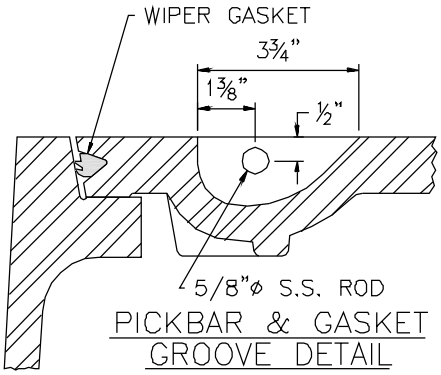

PICKBAR & GASKET GROOVE DETAIL

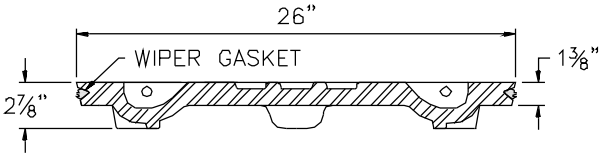

COVER SECTION

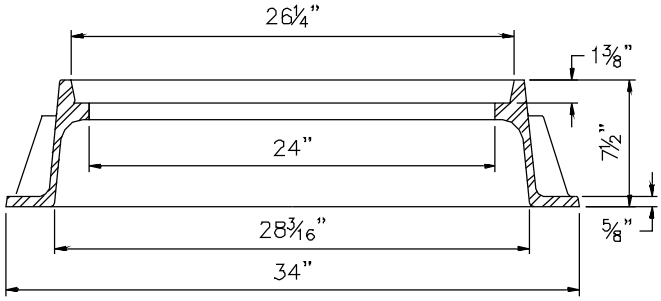

FRAME SECTION

NOTES:

1. MATERIAL: GRAY IRON CONFORMING TO ASTM A48 CL35B.
2. CASTINGS TO BE UNCOATED.
3. COVER TO MEET OR EXCEED AASHTO M-306 PROOF LOAD OF 40,000 LB.
4. ALL LETTERING TO BE CLEAN, CRISP AND CLEARLY LEGIBLE.
5. CASTING MANUFACTURER MUST BE EAST JORDAN IRON WORKS, INC. OR APPROVED EQUIVALENT.
6. CASTINGS TO BE MADE OF RECYCLED MATERIALS, 75% POST CONSUMER WASTE.

EST. WT.

COVER: 170 LBS 77kg
FRAME: 175 LBS 80kg
UNIT: 345 LBS 157kg

MAT'L SPEC.

COVER – GRAY IRON
ASTM A48 CL35
FRAME – GRAY IRON
ASTM A48 CL35

HEAVY DUTY WATERTIGHT MANHOLE RING & COVER

N.T.S.

FRANKLIN COUNTY PUBLIC UTILITIES	
DRAWING #	WATERTIGHT MANHOLE RING AND COVER
S-12	

REVISIONS			
SYM.	DESCRIPTION	DATE	BY

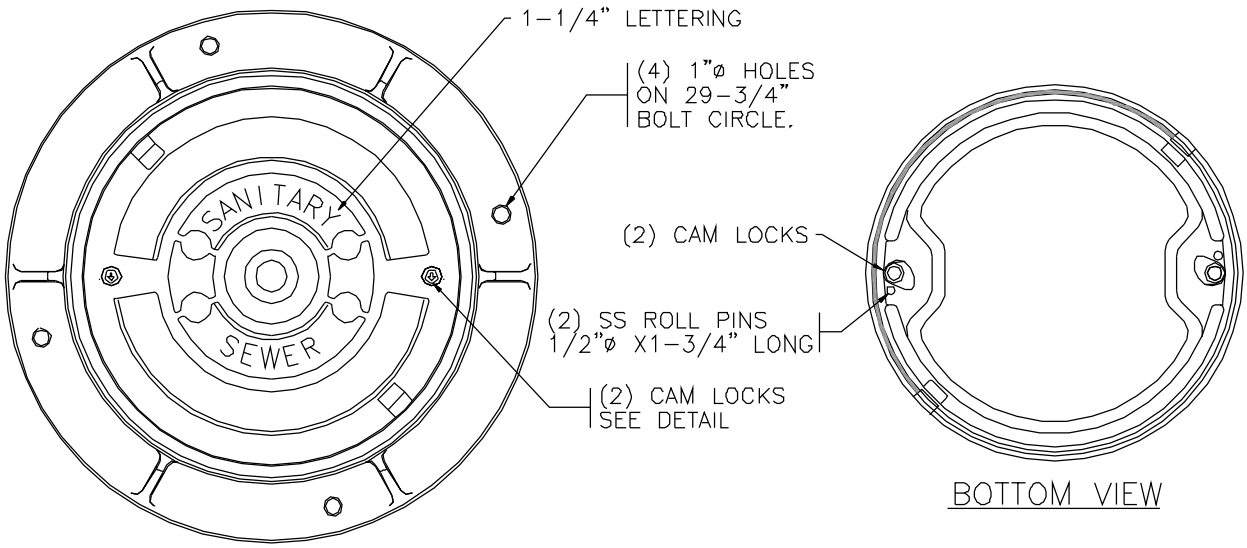

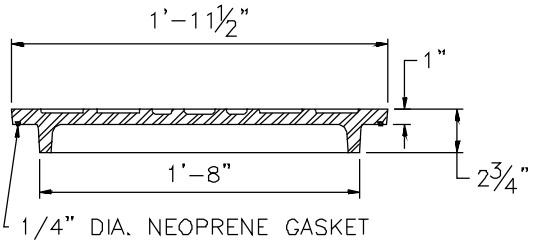

COVER SECTION

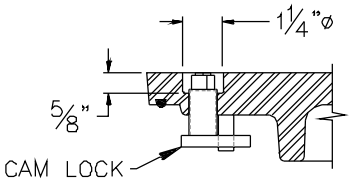

CAM LOCK DETAIL

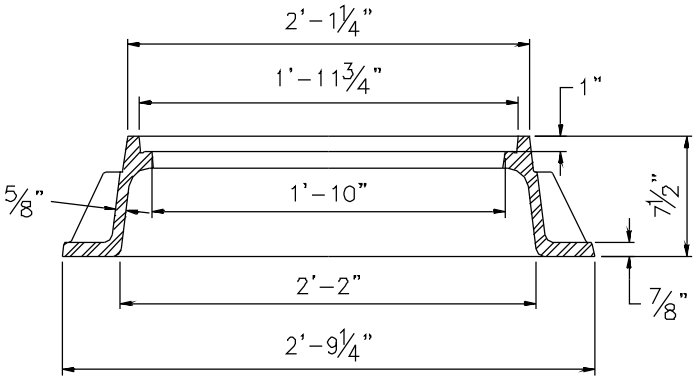

FRAME SECTION

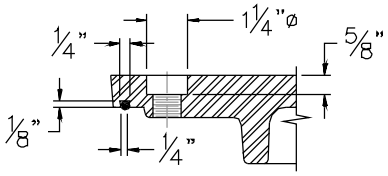

CAM HOLE & GASKET GROOVE DETAIL

LOCKING MANHOLE COVER & RING DETAIL

N.T.S.

FRANKLIN COUNTY PUBLIC UTILITIES	
DRAWING #	LOCKING MANHOLE COVER AND RING DETAIL
S-13	

REVISIONS			
SYM.	DESCRIPTION	DATE	BY

NOTES:

1. COPOLYMER POLYPROPYLENE PLASTIC STEP SHALL BE PLACED 16" O.C. IN ALL STRUCTURES 5' DEPTH OR GREATER.
2. STEPS SHALL BE INSTALLED BY MANUFACTURER AND SHALL BE ALIGNED OVER STRUCTURE INVERT OUT.
3. DIMENSIONS SHOWN ARE TO CONVEY THE DESIRED SIZE OF THE STEP. STEPS OF SIMILAR SIZE AND CONSTRUCTION MAY BE ACCEPTABLE PROVIDED MATERIAL SUBMITTAL IS APPROVED BY PWC.
4. MATERIALS OF CONSTRUCTION AND METHOD OF INSTALLATION SHALL BE IN ACCORDANCE WITH OSHA STANDARDS AND ASTM C-478.

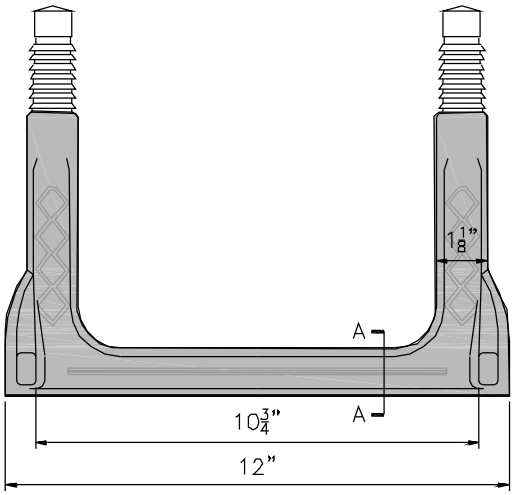

PLAN VIEW

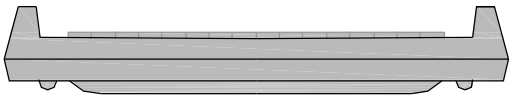

FRONT VIEW

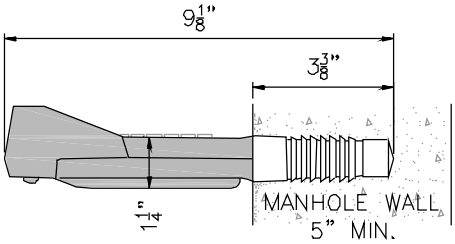

SIDE VIEW

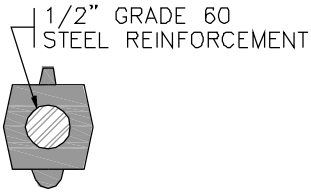

SECTION "A-A"

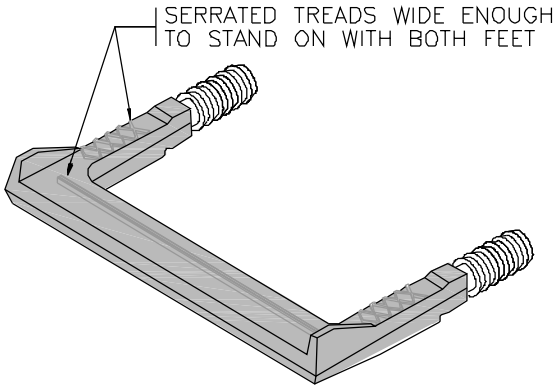

ISOMETRIC VIEW OF STEP

STRUCTURE STEP DETAIL

N.T.S.

FRANKLIN COUNTY PUBLIC UTILITIES	
DRAWING #	
S-14	STRUCTURE STEP DETAIL

REVISIONS			
SYM.	DESCRIPTION	DATE	BY

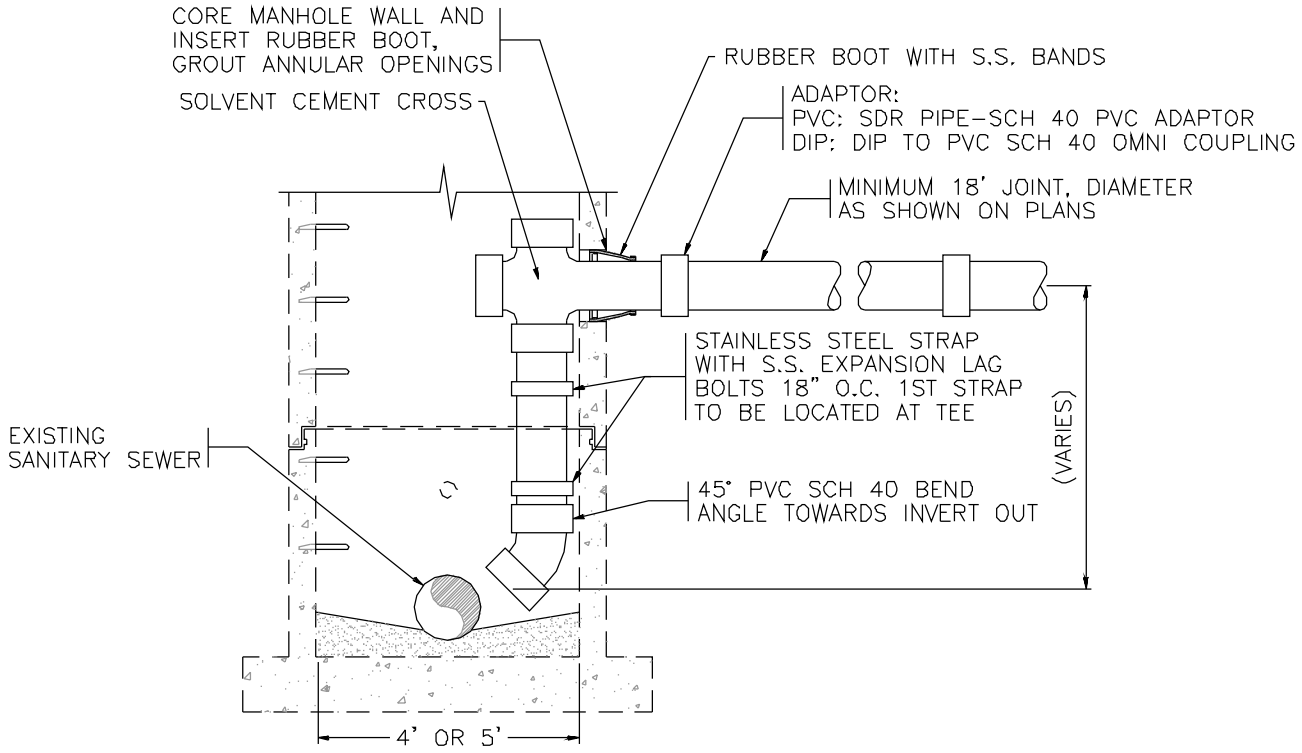

4" SERVICE CONNECTION TO EXISTING OR NEW PRECAST MANHOLE

N.T.S.

NOTES:

1. ALL SERVICE PIPE SHALL BE SCH. 40 PVC.
2. ALL SERVICE ENTRANCES SHALL BE CORED AND BOOTED.
3. LIMIT NO. OF SERVICES INTO MANHOLES TO TWO(2) FOR 4' DIA. MANHOLES & THREE(3) FOR 5' DIA. MANHOLES.
4. INSIDE DROP SHALL BE SAME MATERIAL AS SERVICE FOR ENTIRETY.

FRANKLIN COUNTY PUBLIC UTILITIES	
DRAWING #	4" SERVICE CONNECTION TO EXISTING OR NEW PRECAST MANHOLE
S-15	

REVISIONS			
SYM.	DESCRIPTION	DATE	BY

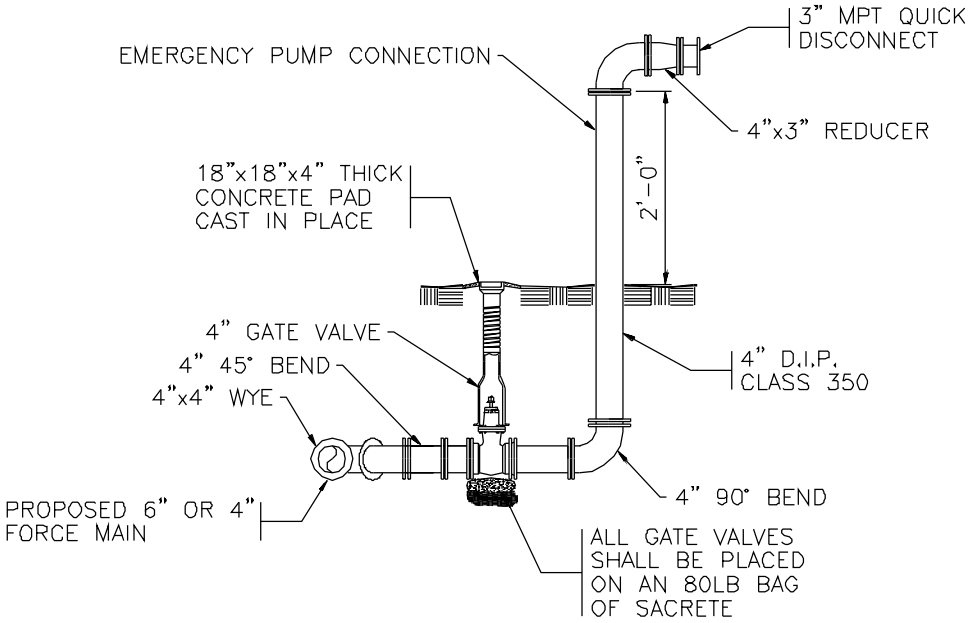

EMERGENCY PUMP CONNECTION

N.T.S.

FRANKLIN COUNTY PUBLIC UTILITIES	
DRAWING #	BYPASS PUMPING CONNECTION DETAIL
S-16	

REVISIONS			
SYM.	DESCRIPTION	DATE	BY

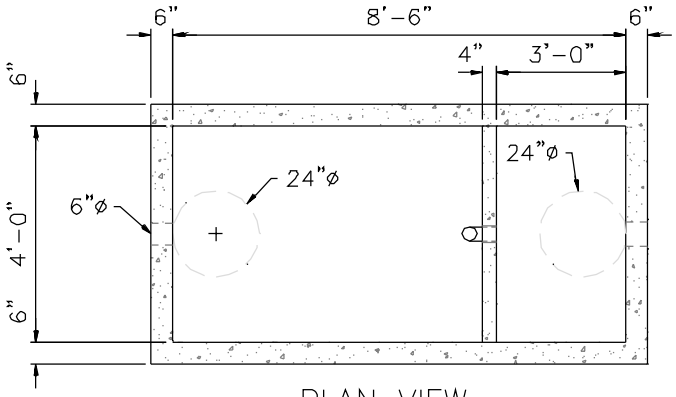

PLAN VIEW

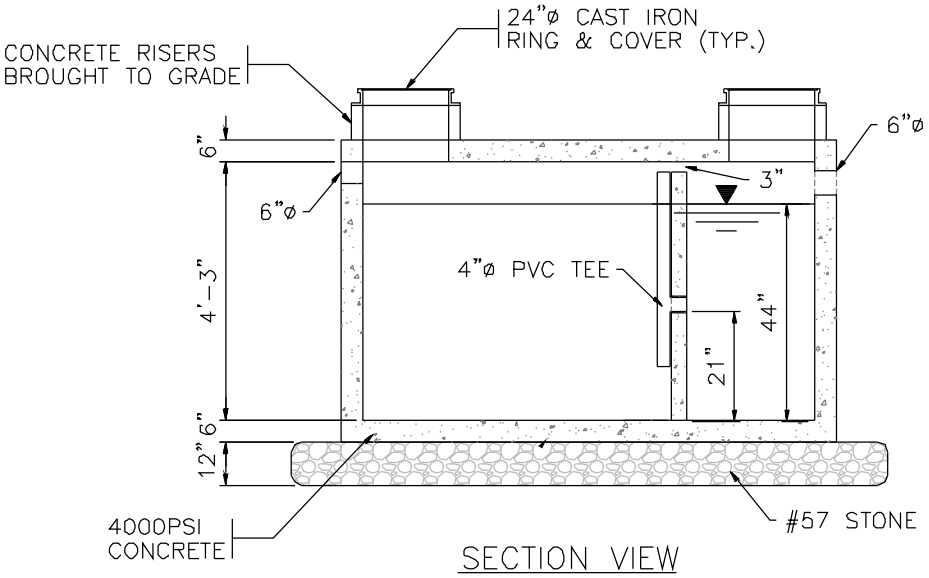

SECTION VIEW

1000 GALLON GREASE TRAP

NOT TO SCALE

FRANKLIN COUNTY PUBLIC UTILITIES	
DRAWING #	1,000 GALLON GREASE TRAP DETAIL
S-17	

NOTES:

1) FOR PRESSURE SEWER SERVICE LATERALS 2" AND LARGER PROVIDE AWWA C-509 GATE VALVE AT EXISTING FORCE MAIN CONNECTION.

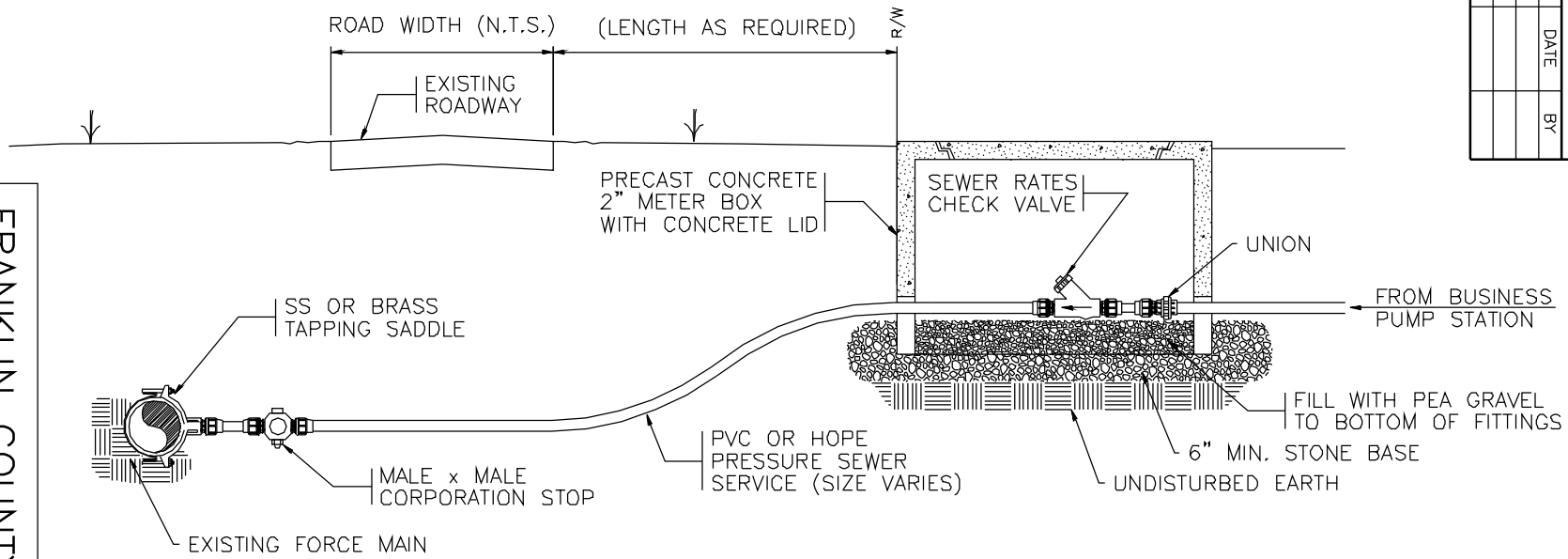

SECTION VIEW

PUMP STATION AND
FORCE MAIN LATERAL INSTALLATION

N.T.S.

REVISIONS			
SYM.	DESCRIPTION	DATE	BY

FRANKLIN COUNTY PUBLIC UTILITIES

DRAWING # S-18

FORCE MAIN TAPS FOR BUSINESSES

REVISIONS			
SYM.	DESCRIPTION	DATE	BY

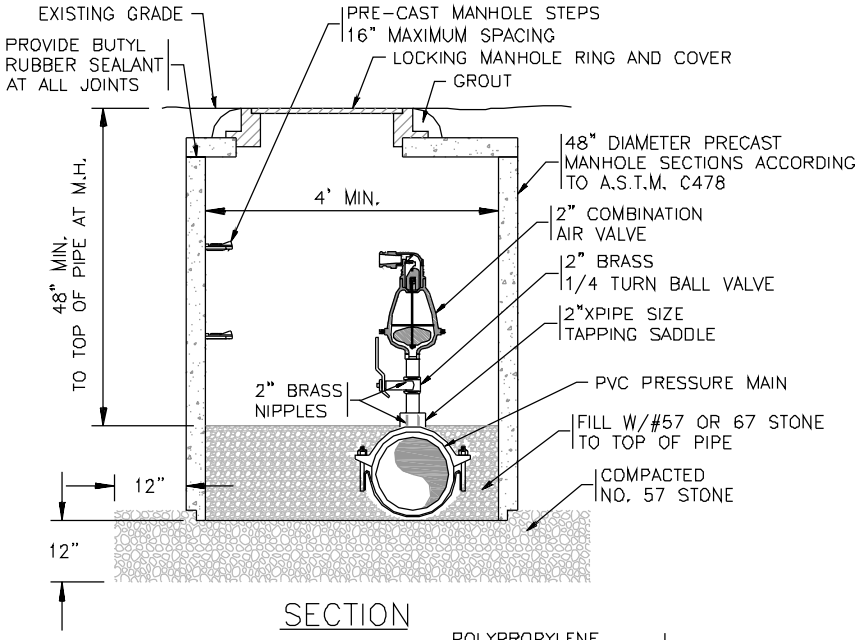

SECTION

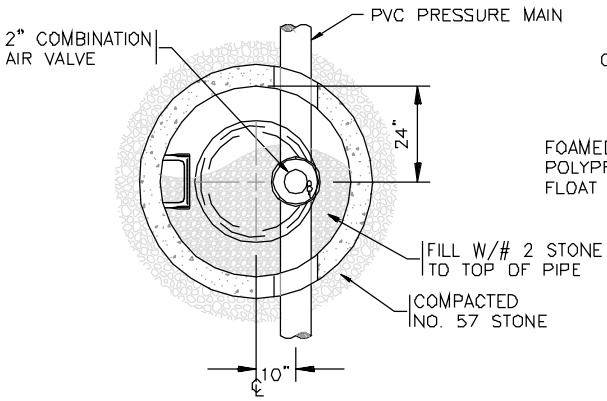

PLAN VIEW

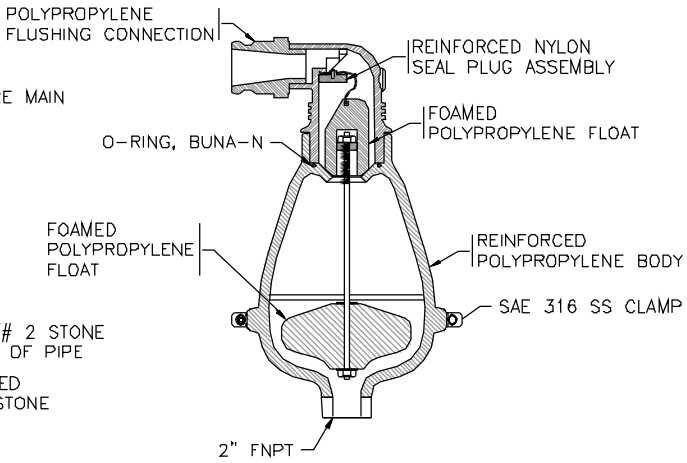

VALVE DETAILS

COMBINATION AIR/VACUUM RELIEF VALVE ASSEMBLY DETAILS

N.T.S.

FRANKLIN COUNTY PUBLIC UTILITIES	
DRAWING #	COMBINATION AIR/ VACUUM RELIEF VALVE ASSEMBLY DETAIL
S-19	

REVISIONS			
SYM.	DESCRIPTION	DATE	BY

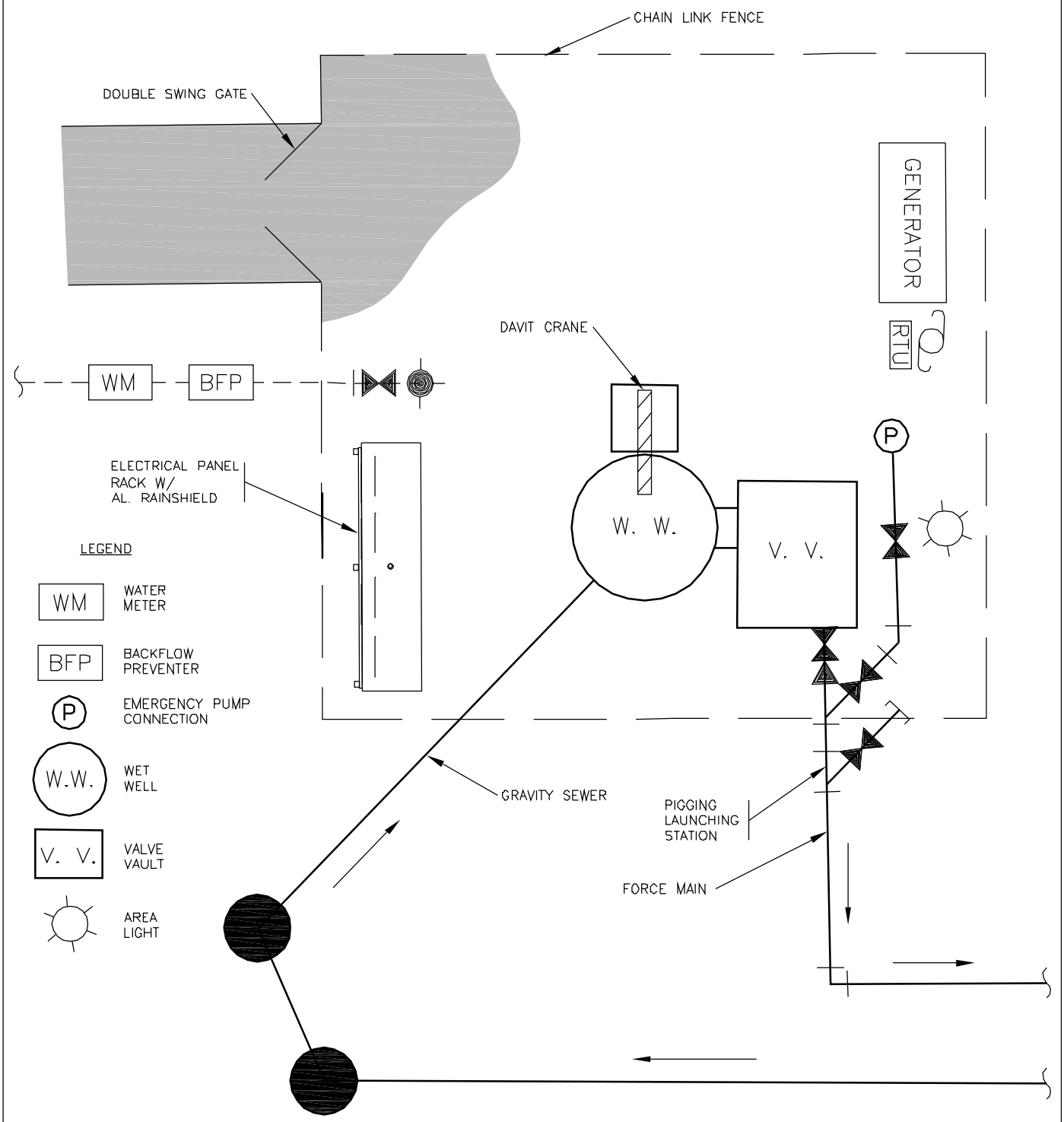

FRANKLIN COUNTY PUBLIC UTILITIES

DRAWING #	GENERAL SITE PLAN SEWER PUMP STATION
S-20	