K:\05\05-260\05261.04\CAD\SF-1\CONST. PLANS\3rd Submittal\SHT 13-16-details.dwg- Wednesday, January 16, 2008 10:36:08 AM - JOHN CORE

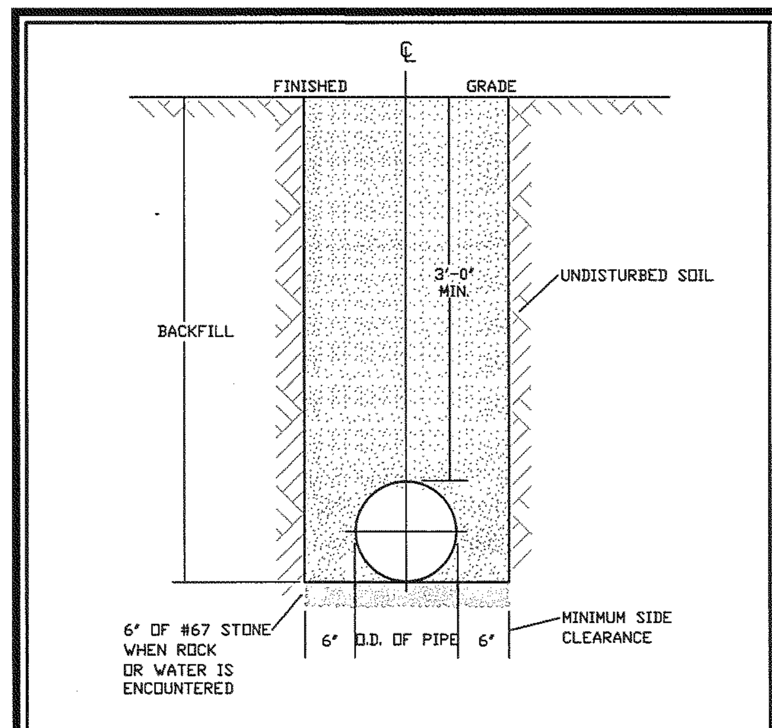

NOTES:
1. Trenches requiring shoring and bracing, dimensions shall be taken from the inside face of the shoring and bracing.
2. No rocks or boulders 4" or larger to be used in backfill.
3. All backfill material shall be suitable native material.
4. Backfill shall be tamped in 6" lifts.
5. Achieve 95% compaction in backfill.

CITY OF RALEIGH — DEPARTMENT OF PUBLIC UTILITIES — TRENCH BOTTOM DIMENSIONS & BACKFILLING REQUIREMENTS FOR DUCTILE IRON — DWG. NO. W-3 — D.W.C. 3-1-87, 9-3-99; RRH 3-31-00; ABB 2-15-05

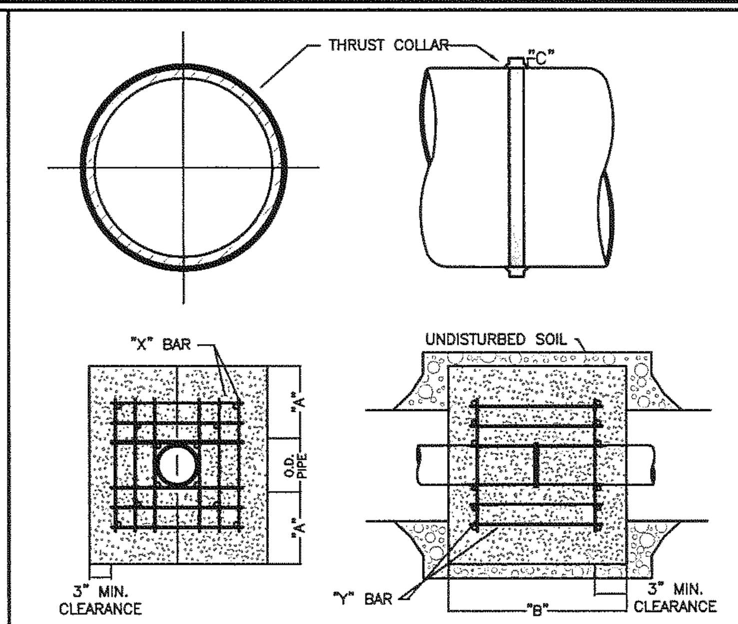

REINFORCING REQUIREMENTS

I.D. PIPE	REBAR SIZE	"X" BAR LENGTH	"X" BAR WEIGHT	"Y" BAR LENGTH	"Y" BAR WEIGHT	NO. REQUIRED
6" - 36"	#6	2'-2"+ O.D. PIPE	1.043 LBS/FT	1'-1"	1.1 LBS. EACH	X-24, Y-12
48" & greater	#8	3'-0"+ O.D. PIPE	1.502 LBS/FT	1'-3"	1.9 LBS. EACH	X-24, Y-12

THRUST COLLAR, AND THRUST SCHEDULE

I.D. PIPE	"A"	"B"	"C"=6"-16", 20"-24", 30"-36", 48"
6" - 36"	1'-4"	1'-1"	5" 6"
48" & greater	1'-8"	1'-8"	8"

NOTES:
1. SEE STANDARD DETAIL W-8 FOR THRUST BLOCK LOCATIONS.
2. CONCRETE SHALL BE 3000 PSI AND TRANSIT MIXED.
3. REINFORCING BARS SHALL BE DEFORMED AND TIED TOGETHER.
4. TRENCH BOTTOM WIDTH IN VICINITY OF THRUST BLOCK INSTALLATION SHALL BE THE MINIMUM WIDTH AS SHOWN ON STANDARD DETAIL W-3.
5. BACKFILL TAMPED IN 6" LIFTS PER STANDARD DETAIL W-3.
6. THRUST COLLAR MUST BE FACTORY WELDED ON BOTH SIDES ALONG BOTH EDGES OF COLLAR AROUND CIRCUMFERENCE.

CITY OF RALEIGH — DEPARTMENT OF PUBLIC UTILITIES — THRUST BLOCKING DESIGN DATA FOR WATER MAINS — DWG. NO. W-7 — RRH 1-21-00

REACTION BEARING AREAS FOR HORIZONTAL WATER PIPE BENDS
BASED ON TEST PRESSURE OF 200 P.S.I.
ALL AREAS GIVEN IN SQUARE FEET.

SIZE AND DEGREE OF BEND	STATIC THRUST IN POUNDS	MODERATELY DRY CLAY 4000 LBS/FT²	SOFT CLAY 2000 LBS/FT²	GRAVEL / COARSE SAND 1600 LBS/FT²	DRY CLAY - ALWAYS DRY 8000 LBS/FT²	SAND, COMPACT FIRM 8000 LBS/FT²	SAND - CLEAN DRY 4000 LBS/FT²	QUICKSAND - VERY POOR SOIL 1000 LBS/FT²	ROCK - POOR 10,000 LBS/FT²
6"									
11 1/4°	1,108	1	1	1	1	1	1	2	1
22 1/2°	2,207	1	2	2	1	1	1	3	1
45°	4,328	2	3	3	1	1	2	5	1
90°	7,996	2	4	5	1	1	2	8	1
PLUG	5,655	2	3	4	1	1	2	6	1
8"									
11 1/4°	1,970	1	1	2	1	1	1	2	1
22 1/2°	3,922	1	2	3	1	1	1	4	1
45°	7,694	2	4	5	1	1	2	8	1
90°	14,215	4	8	9	2	2	4	15	2
PLUG	10,053	3	5	6	2	2	3	10	1
12"									
11 1/4°	4,433	2	3	3	1	1	2	5	1
22 1/2°	8,826	3	5	6	2	2	3	9	1
45°	17,312	5	9	11	3	3	5	18	2
90°	31,983	8	16	19	4	4	8	32	4
PLUG	22,619	6	12	14	3	3	6	23	3
16"									
11 1/4°	7,881	2	4	5	1	1	2	8	1
22 1/2°	15,691	4	8	10	2	2	4	16	2
45°	30,779	8	16	19	4	4	8	31	4
90°	56,861	15	29	35	8	8	15	57	6
PLUG	40,213	10	21	25	5	5	10	41	5

REACTION BEARING AREAS ARE IN SQUARE FEET MEASURED IN A VERTICAL PLANE IN THE TRENCH SIDE AT AN ANGLE OF 90° TO THE THRUST VECTOR.
USE 6" - 90° BEND VALUE FOR HYDRANTS FOR ADDITIONAL SAFETY FACTOR.

CITY OF RALEIGH — DEPARTMENT OF PUBLIC UTILITIES — THRUST BLOCKING DESIGN QUANTITY TABLE — DWG. NO. W-10 — D.W.C. 5-23-99

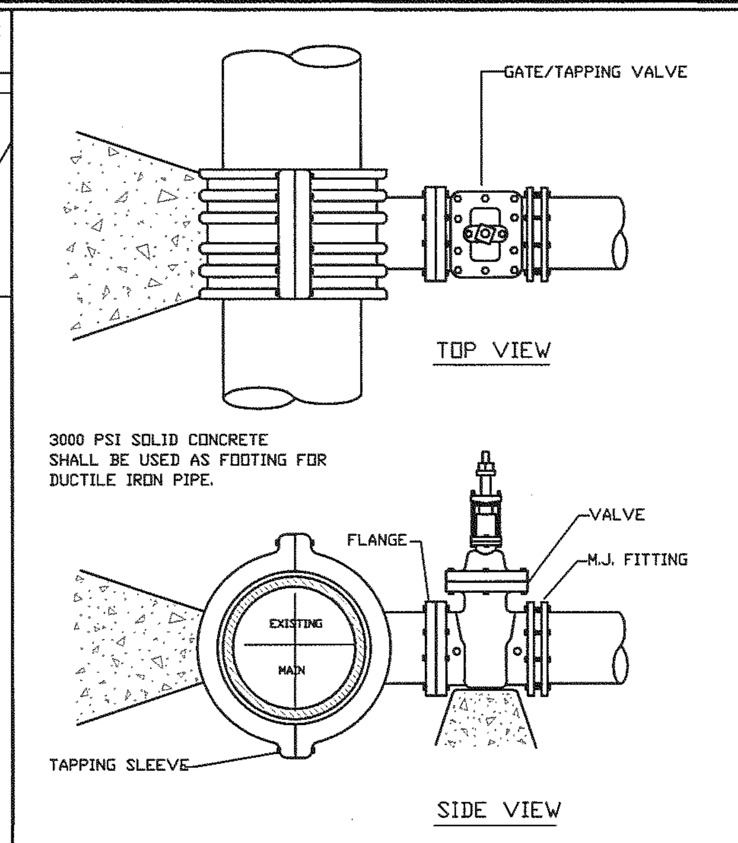

NOTES:
1. CONCRETE SHALL NOT CONTACT BOLTS OR ENDS OF MECHANICAL JOINT FITTINGS.
2. SEE STANDARD REACTION BLOCK TABLES, W-10 AND W-11 FOR AREA OF CONCRETE REQUIRED.

CITY OF RALEIGH — DEPARTMENT OF PUBLIC UTILITIES — 4" - 24" STANDARD TAPPING SLEEVE AND VALVE ASSEMBLY — DWG. NO. W-14 — Y.C.A. 3-1-87; D.W.C. 12-31-91; RRH 9-7-99, 3-31-00

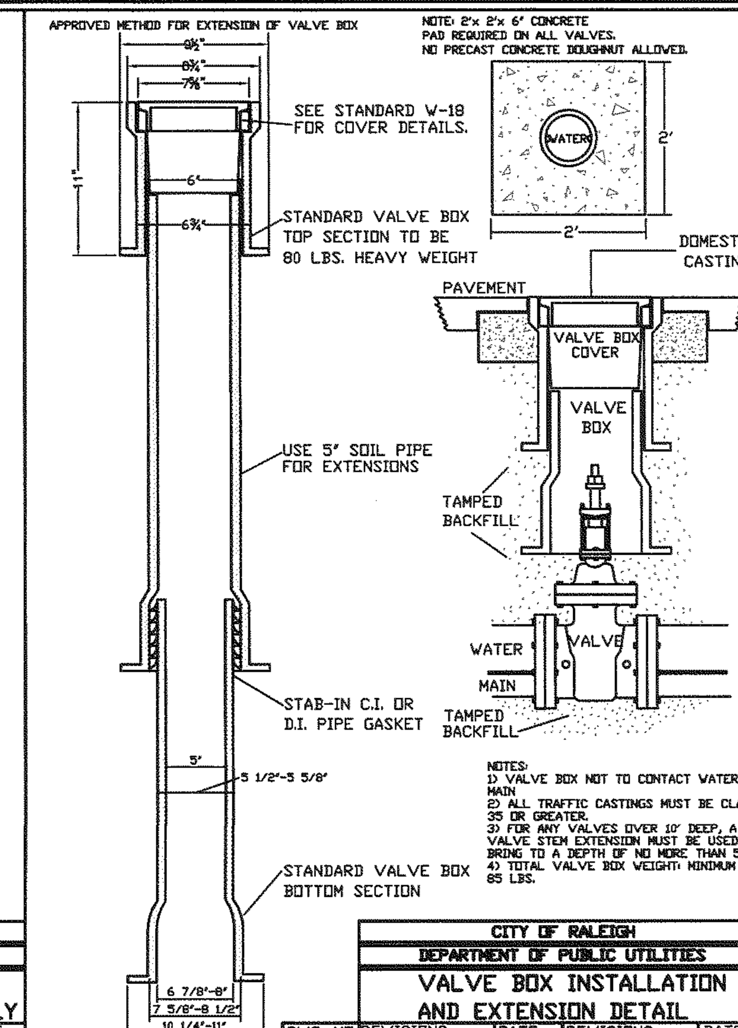

NOTES:
1) VALVE BOX NOT TO CONTACT WATER MAIN.
2) ALL TRAFFIC CASTINGS MUST BE CLASS 35 OR GREATER.
3) FOR ANY VALVES OVER 10' DEEP, A VALVE STEM EXTENSION MUST BE USED TO BRING TO A DEPTH OF NO MORE THAN 5'.
4) TOTAL VALVE BOX WEIGHT: MINIMUM OF 85 LBS.

CITY OF RALEIGH — DEPARTMENT OF PUBLIC UTILITIES — VALVE BOX INSTALLATION AND EXTENSION DETAIL — DWG. NO. W-17 — Y.C.A. 12-31-91; D.W.C. 9-7-99; RRH 3-31-00; A.B.B. 4-15-04

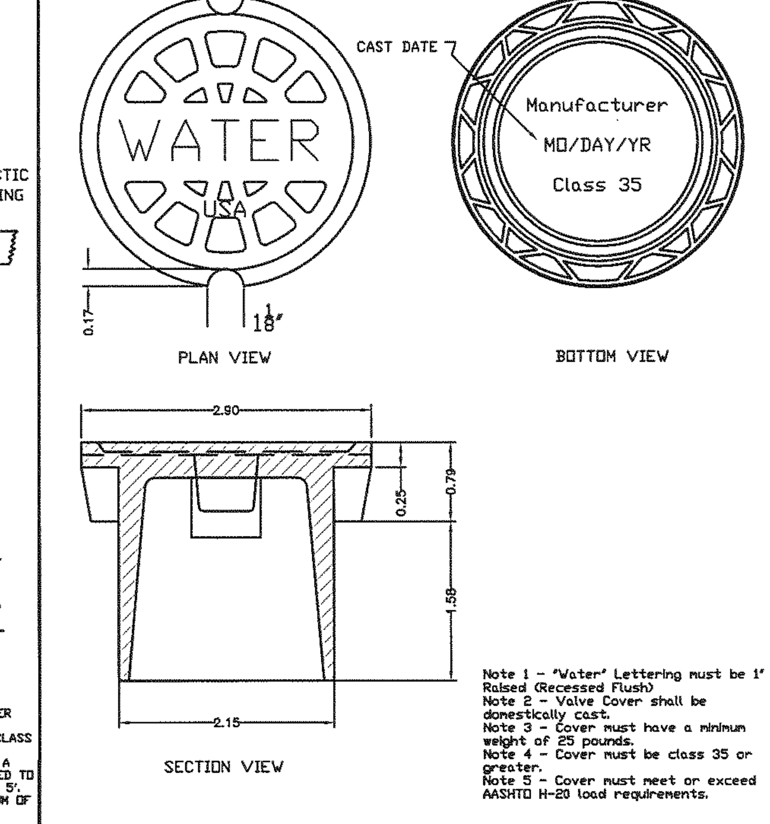

Note 1 - "Water" Lettering must be 1" Raised (Recessed Flush)
Note 2 - Valve Cover shall be domestically cast.
Note 3 - Cover must have a minimum weight of 25 pounds.
Note 4 - Cover must be class 35 or greater.
Note 5 - Cover must meet or exceed AASHTO H-20 load requirements.

CITY OF RALEIGH — DEPARTMENT OF PUBLIC UTILITIES — 5 1/4" Valve Box Drop Lid 4" Skirt — DWG. NO. W-18 — ABB 2-12-04

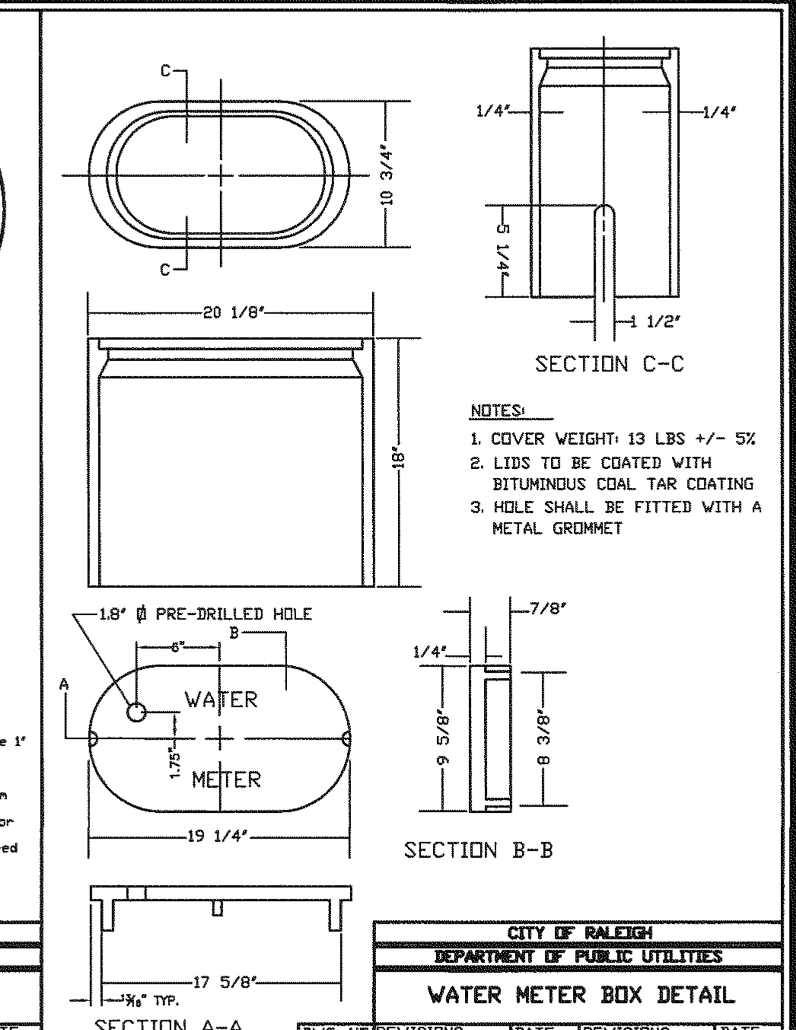

NOTES:
1. COVER WEIGHT: 13 LBS +/- 5%
2. LIDS TO BE COATED WITH BITUMINOUS COAL TAR COATING
3. HOLE SHALL BE FITTED WITH A METAL GROMMET

CITY OF RALEIGH — DEPARTMENT OF PUBLIC UTILITIES — WATER METER BOX DETAIL — DWG. NO. W-25 — D.W.C. 3-1-87, 11-3-99; RRH 3-31-00; ABB 1-20-05

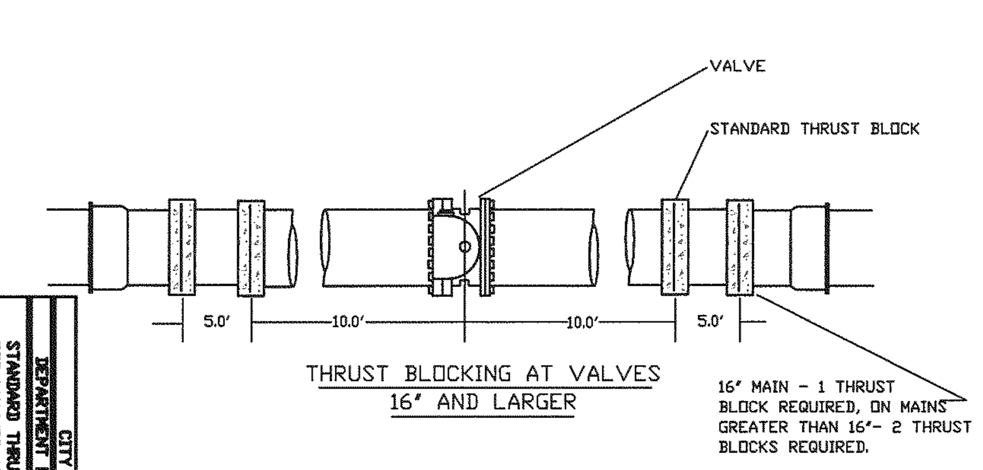

CITY OF RALEIGH — DEPARTMENT OF PUBLIC UTILITIES — STANDARD THRUST BLOCK INSTALLATION FOR VALVES AND DEAD END MAINS — DWG. NO. W-8 — Y.C.A. 6-92; D.W.C. 4-12-90, 9-7-99; RRH 3-31-00

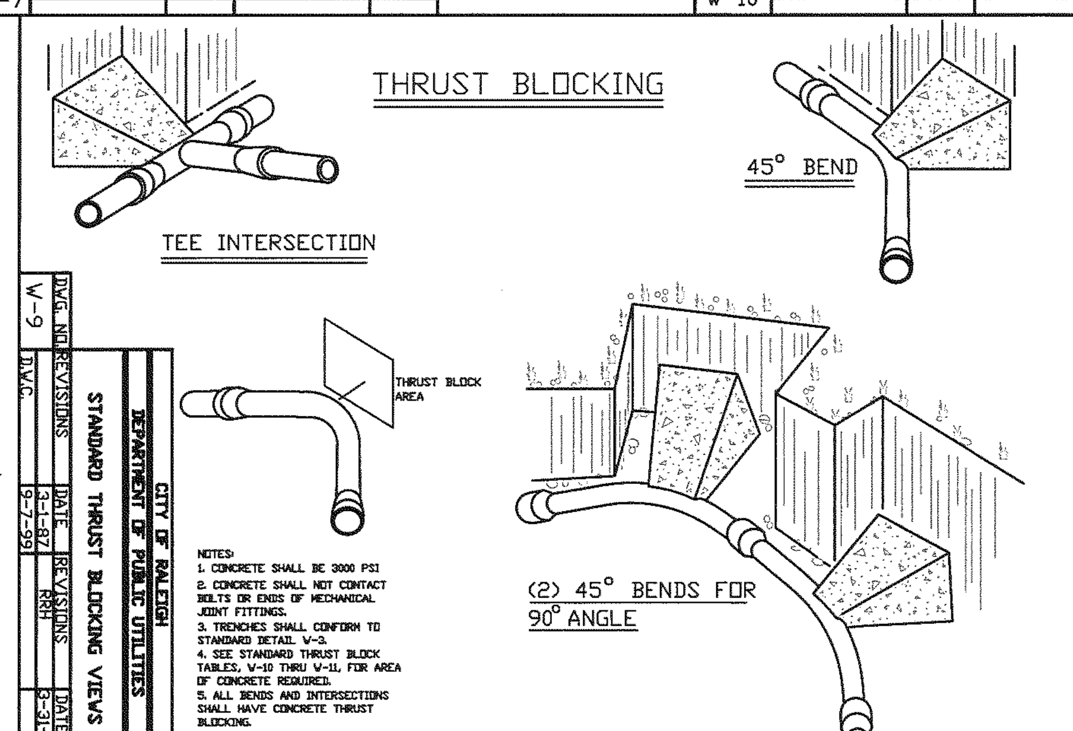

NOTES:
1. CONCRETE SHALL BE 3000 PSI
2. CONCRETE SHALL NOT CONTACT BOLTS OR ENDS OF MECHANICAL JOINT FITTINGS.
3. TRENCHES SHALL CONFORM TO STANDARD DETAIL W-3.
4. SEE STANDARD THRUST BLOCK TABLES, W-10 THRU W-11, FOR AREA OF CONCRETE REQUIRED.
5. ALL BENDS AND INTERSECTIONS SHALL HAVE CONCRETE THRUST BLOCKING.

CITY OF RALEIGH — DEPARTMENT OF PUBLIC UTILITIES — STANDARD THRUST BLOCKING VIEWS — DWG. NO. W-9 — D.W.C. 3-1-87; RRH 9-7-99, 3-31-00

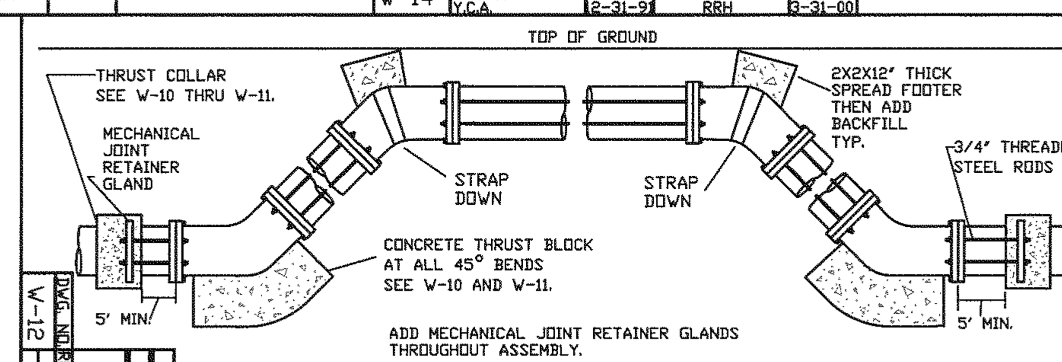

ROD REQUIREMENTS

SIZE OF 45 BEND	STATIC THRUST IN POUNDS	NO. OF RODS REQUIRED
6"	4,328	2
8"	7,694	4
12"	17,312	4
16"	30,779	8
24"	69,252	8

GENERAL NOTES:
1. STEEL RODS AND BOLTS SHALL BE 3/4" HOT DIPPED GALVANIZED.
2. CONCRETE SHALL NOT CONTACT BOLTS OR ENDS OF MECHANICAL JOINT BENDS.
3. RESTRAINED MECHANICAL GLANDS TO BE USED AT ALL FITTINGS.
4. MUST USE DUCTILE IRON EYE BOLTS WHERE NECESSARY.

CITY OF RALEIGH — DEPARTMENT OF PUBLIC UTILITIES — STANDARD VERTICAL BEND — DWG. NO. W-12 — ABB 4-6-04

MAIN SIZE	END PIPE SIZE
6" - 12"	SAME DIAMETER AS MAIN
16" & GREATER	APPROVED BY PUBLIC UTILITIES DEPT.

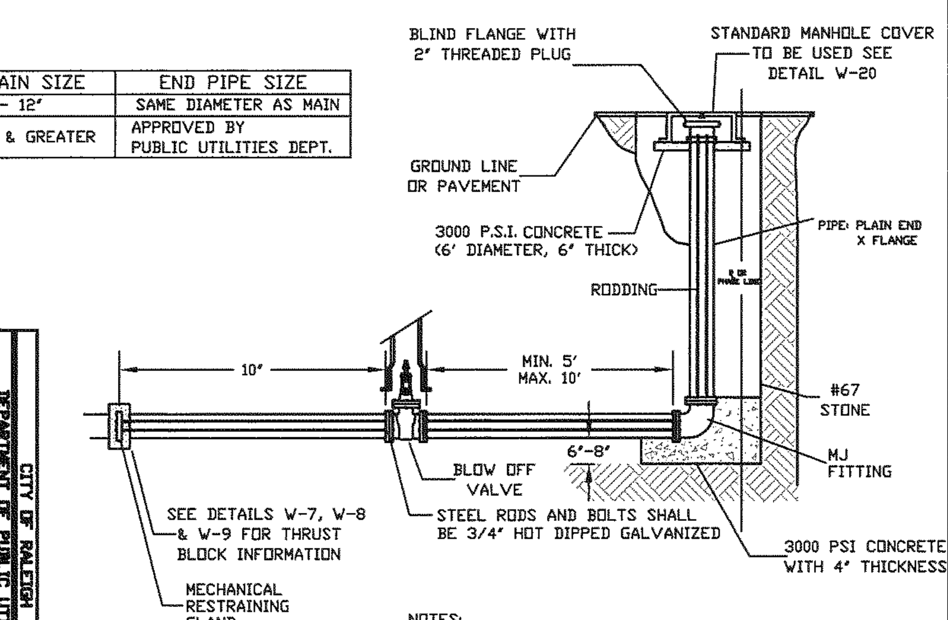

NOTES:
1) NO ROD COUPLINGS ALLOWED

CITY OF RALEIGH — DEPARTMENT OF PUBLIC UTILITIES — TEMPORARY WATER MAIN BLOW OFF ASSEMBLY — DWG. NO. W-21 — RRH; D.W.C. 12-28-99, 3-31-00; A.B.B. 4-12-04

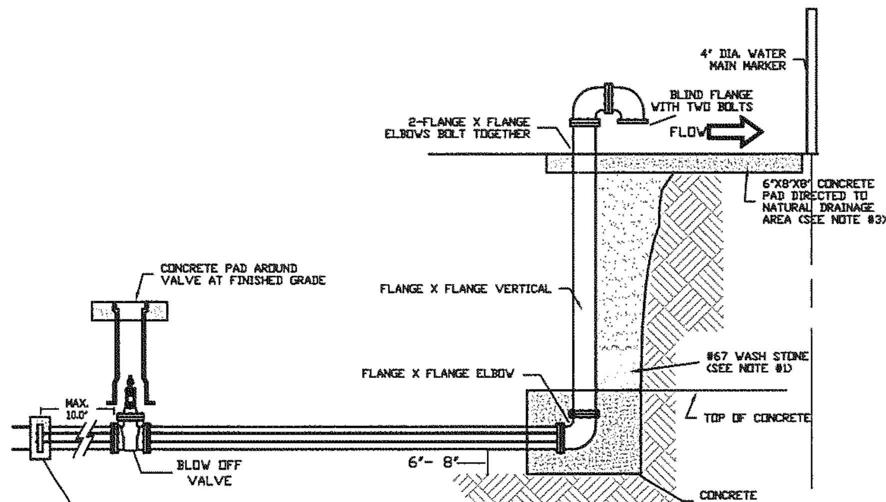

NOTES:
1. DRILL 1/4" WEEP HOLE FOR STACK DRAINAGE INTO STONE.
2. DOUBLE 3/4" BRIDLE RODS ON BOTH SIDES.
3. A RIP-RAP SWALE FROM FROM CONCRETE SPLASH PAD TO POSITIVE DRAINAGE AREA IS REQUIRED FOR POSITIVE DRAINAGE.
4. BOTTOM 90° ELBOW SHALL HAVE BLIND FLANGE ATTACHED WITH TWO BOLTS.
5. INSTALL WATER MAIN MARKER AT R/W OR P/L TO LOCATE MAIN.
6. 3/4" RODS AND BOLTS TO BE HOT DIPPED GALVANIZED.
7. END PIPE SIZE SHALL BE SAME AS MAIN SIZE.

CITY OF RALEIGH — DEPARTMENT OF PUBLIC UTILITIES — PERMANENT WATER MAIN BLOW OFF ASSEMBLY — DWG. NO. W-22 — D.W.C. 12-28-99; A.B.B. 4-13-04

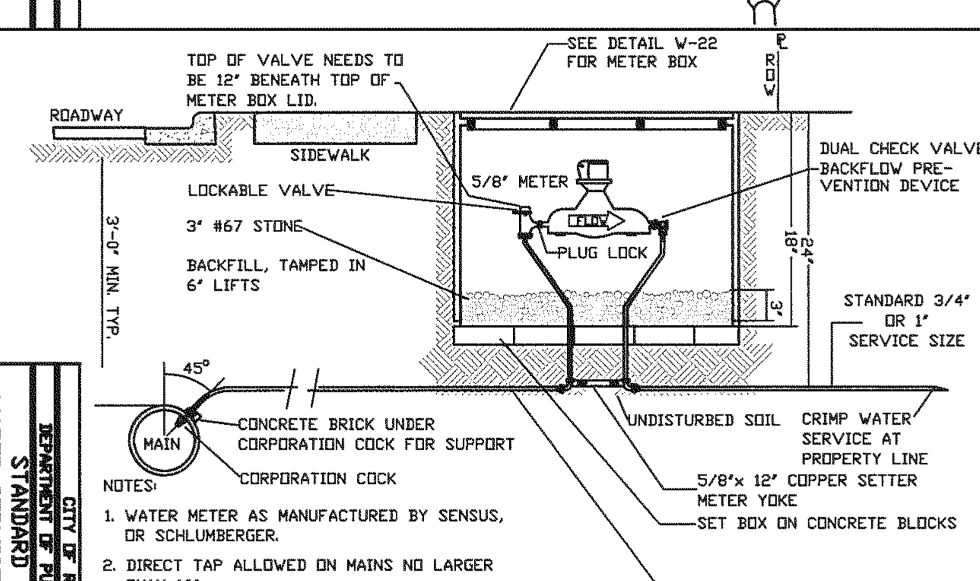

NOTES:
1. WATER METER AS MANUFACTURED BY SENSUS, OR SCHLUMBERGER.
2. DIRECT TAP ALLOWED ON MAINS NO LARGER THAN 16".
3. METER BOX TO BE LOCATED IN R/W ADJACENT TO PROPERTY LINE, OR IN APPROVED EASEMENT ADJACENT TO R/W.
4. WHEN THE GRADE CHANGES, A COPPER RESETTER CAN BE USED TO ADJUST TO PROPER GRADE.
5. FOR STANDARD METER BOX SEE W-22
6. ADDITIONAL BACKFLOW PREVENTION DEVICE MAY BE REQUIRED IF USED ON MORE THAN TWO RESIDENTIAL UNITS.

CITY OF RALEIGH — DEPARTMENT OF PUBLIC UTILITIES — STANDARD 3/4" & 1" WATER SERVICE INSTALLATION — DWG. NO. W-23 — ABB 4-6-04

NOTES:
CONCRETE THRUST COLLAR TO HAVE MIN. OF 6 SQ. FT. BEARING ON SOLID BANK (MORE IF REQ'D) DRAIN HOLE AND FLANGES SHALL BE CLEAR OF CONCRETE.

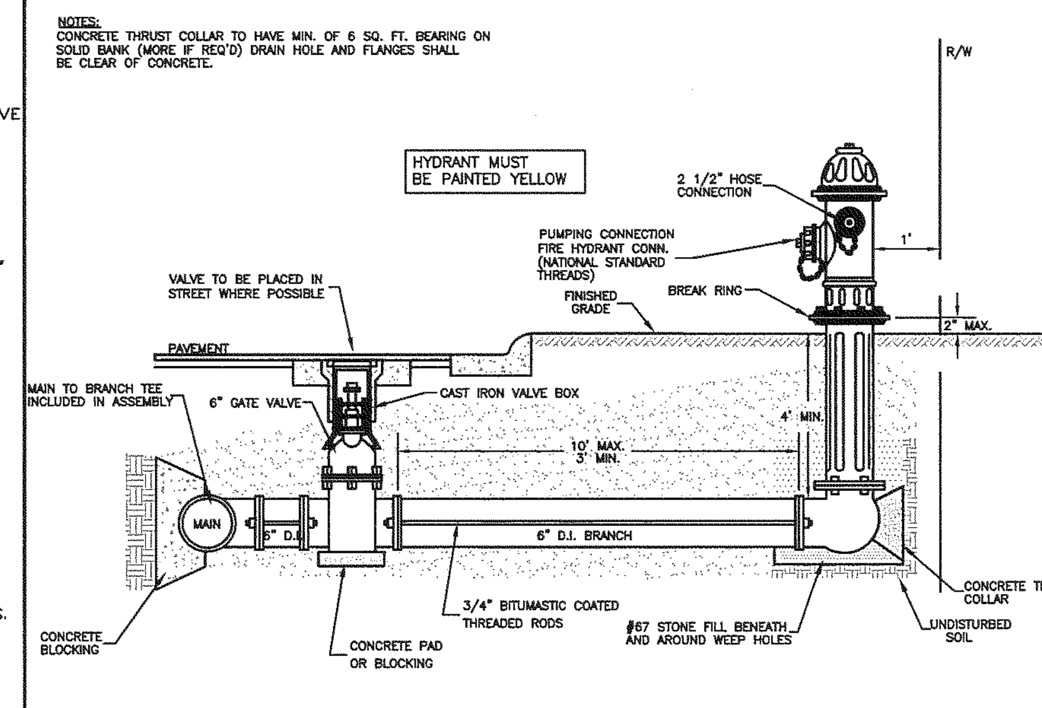

CONCRETE THRUST COLLAR WITH ANCHOR RING TO BE USED IF DISTANCE BETWEEN VALVE AND HYDRANT EXCEEDS 10 FT.

TOWN OF WENDELL
STANDARD HYDRANT INSTALLATION

CONSTRUCTION SPECIFICATIONS

PUBLIC
Sewer Collection/Extension System

The City Raleigh consents to the connection and extension of the City's public sewer system as shown on this plan. The material and construction methods used for this project shall conform to the standards and specifications of the City's Public Utilities Handbook.

City of Raleigh Public Utilities Department Permit # S-3096 (REV.)

Authorization to Construction [signature]

Date 1/24/08

CONSTRUCTION SPECIFICATIONS

PUBLIC
Water Distribution/Extension System

The City Raleigh consents to the connection and extension of the City's public water system as shown on this plan. The material and construction methods used for this project shall conform to the standards and specifications of the City's Public Utilities Handbook.

City of Raleigh Public Utilities Department Permit # W-2553 (REV.)

Authorization to Construction [signature]

Date 1/24/08

THESE PLANS HAVE BEEN APPROVED FOR CONSTRUCTION BY THE TOWN OF WENDELL

[signature] 1-18-08
ZONING / SUBDIVISION ADMINISTRATOR — DATE

[signature] 1-20-08
TOWN OF WENDELL FIRE CHIEF — DATE

NORTH CAROLINA PROFESSIONAL ENGINEER SEAL 18498 KENNETH L. JESNECK [signature] 1/17/08

No.	Revision	Date	By
1	FIRST REVIEW COMMENTS	03/07/07	SFP
2	PER TOW & COR COMMENTS	04/25/07	JAC
3	MYLAR	05/10/07	DLP
4	GRADING AND STORM REVISIONS	08/10/07	JAC
5	GRADING & STORM REVISIONS	10/10/07	JEW

Designer	DLP/JEW	Scale	N.T.S.
Drawn By	RSM	Date	12/07/06
Checked By	DLP/KLJ	Job No.	02050261.04

WENDELL FALLS - SF1

WENDELL — WAKE COUNTY — NORTH CAROLINA

WATER DETAILS

WITHERS & RAVENEL
ENGINEERS | PLANNERS | SURVEYORS
111 MacKenan Drive Cary, North Carolina 27511 tel: 919-469-3340 fax: 919-467-6008 www.withersravenel.com

Sheet No. 14.0